"Time-Based Tree Graphs for Stabilized Force Structure Representations"*

8th International Command & Control Research & Technology Symposium

National Defense University

Ft. McNair, Washington, DC

19 June 2003

Sam Chamberlain, Ph.D.
US Army Research Laboratory
wildman@arl.army.mil
(410) 278-8948 // DSN 298
http://www.arl.army.mil/~wildman

Chris Leeds
Chief, Combat Service Support MTOE Division
U.S. Army Force Management Support Agency
leeds@hqda.army.mil
(703) 805-4189 // DSN 655

* Sponsored and Funded by the US Army G-8 / Director of Integration

ID Retention - Main Problem

- Force structure is a (the) primary part of the initial conditions entered into battle command system databases. The system users add copious local data to the initial data.
- Because force structure is at the heart of any battle command model, nearly all other user entities are linked to it. If the force structure data is not stable and carefully managed, then it will be a difficult task to maintain consistency in these databases.
- Data must not changed unless the changes are truly bona fide.

Primary Task - Change Management

- In the Army, there are about 4900 MTOEs
  (Modification Tables of Organization & Equipment)
  [1550 Active + 3350 Reserve/Guard]
- They can change every six months.
- Huge obstacle to re-link systems deployed in the field, a cost that is much bigger than the cost of changing the MTOEs themselves.
- Focus: (1) Maintainability, (2) Interoperability, and (3) Generality.
  This led to the "Org-ID Retention" Project.
- The force structure representation process must:
  - (1) be automated and easily accessible
  - (2) be usable by a diverse set of users and applications
  - (3) permeate the whole Force Structure Development Process
    (Requirements (TOE) ⮝ Authorizations (MTOE) ⮝ Real Units (Forces)
  - (4) result in an openly available source that is directly downloadable into tactical systems (e.g., the Army Battle Command System).
  - (5) minimize changes and be accompanied by a *change information* to ensure consistency and integrity of the data after an update occurs.

(M)TOE Structure

Root Org
(Mapped to Real Unit)

RFL CO
INF BN
(MECH) (XXI)

Ultimately
Assigned a UIC

Para:
A Single
Clustering
Level

Company HQs

Rifle Platoon HQS

3 Vehicle Sections

Rifle Squads

Personnel & Equipment Data

P	E
Line #	Lin

P	E
Line #	Lin

P	E
Line #	Lin

P	E
Line #	Lin

w/ Multipliers

Example MTOE - Personnel

UNCLASSIFIED

INPUT ANALYSIS REPORT - MTOE

SECTION II - PERSONNEL

DOCNO 07245FFC10
CCNUM FC0601
EDATE 08/17/2001

PARNO	PERLN	UMLUNT	SUB UNIT TITLE / PARAGRAPH TITLE / UICDR POSITION TITLE	GR	POSCO	SQI 2D	ASI 01	ASI 02	LICCO	LPIND	BR	IDENT	PPSST	PSIRQ	PPSRQ	REQ STR	AUTH STR	PURST	PAUST	PERMK 1	PERMK 2	PERMK 3	LNSTS	COVCD	MDUIC
	01		PLATOON LEADER	O2	11A00		3X	5Q			IN	O	Y	Y	Y	1	1	3	3	12			8		
	02		PLATOON LEADER	O2	11A00		3X	5R			IN	O	Y	Y	Y	2	2	6	6	12			8		
	07		RADIO TELEPHONE OPR	E3	11B1O							E	Y	Y	Y	3	3	9	9	12			8		
										TOTAL FOR PARA					202	6	6	18	18						
203			VEHICLE SECTION																						
	01		PLATOON SERGEANT	E7	11B4O						NC	E	Y	Y	Y	3	3	9	9	12			8		
	02		SECTION LEADER	E6	11B3O		J3				NC	E	Y	Y	Y	6	6	18	18				8		
	03		GUNNER	E5	11B2O						NC	E	Y	Y	Y	6	6	18	18	04			8		
	04		GUNNER	E4	11B1O							E	Y	Y	Y	9	9	27	27				8		
	05		IFV DRIVER	E4	11B1O							E	Y	Y	Y	12	12	36	36	04			8		
										TOTAL FOR PARA					203	36	36	108	108						
204			RIFLE SQUADS																						
	11		SQUAD LEADER	E6	11B3G						NC	E	Y	Y	Y	3	3	9	9				8		
	12		SQUAD LEADER	E6	11B3O						NC	E	Y	Y	Y	6	6	18	18				8		
	13		TEAM LEADER	E5	11B2G						NC	E	Y	Y	Y	9	9	27	27				8		
	14		TEAM LEADER	E5	11B2O						NC	E	Y	Y	Y	9	9	27	27				8		
	15		AUTOMATIC RIFLEMAN	E4	11B1O							E	Y	Y	Y	18	18	54	54				8		
	16		GRENADIER	E4	11B1O							E	Y	Y	Y	18	18	54	54				8		
	17		ANTIARMOR SPECIALIST	E3	11B1O		C2					E	Y	Y	Y	9	9	27	27				8		
	18		RIFLEMAN	E3	11B1O		B4					E	Y	Y	Y	9	9	27	27				8		
										TOTAL FOR PARA					204	81	81	243	243						
205			ANTIARMOR SECTION																						
										TOTAL FOR PARA					205	0	0	0	0						

PAGE NO: 11

UNCLASSIFIED

Example MTOE - Equipment

UNCLASSIFIED

INPUT ANALYSIS REPORT - MTOE

SECTION III - EQUIPMENT

DOCNO 07245FFC10
CCNUM FC0601
EDATE 08/17/2001

PARNO	LINUM	ERCOD	UMUL	SUB UNIT TITLE / PARAGRAPH TITLE / UICDR NOMENCLATURE	REQ EQMT	AUTH EQMT	PUREQ	PAUEQ	ERMK 1	ERMK 2	LNSTS	COVCD	MDUIC
202				3 RIFLE PLT HQS									
	A34938	A		AIMING LIGHT INFRARED: AN/PAQ-4	3	3	9	9			8		
	B67766	B		BINOCULAR: MODULAR CONSTRUCTION MIL SCALE RETICLE 7X50MM W/E	3	3	9	9			8		
	D10788	A		DIGITAL DATA SET: AN/PSG-7V1	3	3	9	9			8		
	D78555	A		DATA TRANSFER DEVICE: AN/CYZ-10	3	3	9	9			8		
	M74849	B		MINI EYESAFE LASER INFRARED OBSERVATION SET (MELIOS): AN/PVS-6	3	3	9	9			8		
	N05482	A		NIGHT VISION GOGGLE: AN/PVS-7B	3	3	9	9			8		
	N95862	B		NAVIGATION SET SATILLITE SYSTEMS: AN/PSN-11	3	3	9	9			8		
	R31061	B		RADIAC SET: AN/UDR-13	3	3	9	9			8		
	R55336	A		RADIO SET: AN/PRC-126	3	3	9	9			8		
	R83073	A		RADIO SET: AN/PRC-119D	3	3	9	9			8		
	S60288	B		SIGHT: REFLEX COLLIMATOR	6	6	18	18			8		
203				VEHICLE SECTION									
	A33020	B		ALARM: CHEMICAL AGENT AUTOMATIC M22	3	3	9	9			8		
	B67766	B		BINOCULAR: MODULAR CONSTRUCTION MIL SCALE RETICLE 7X50MM W/E	3	3	9	9			8		
	C68719	B		CABLE TELEPHONE: WD-1/TT DR-8 1/2 KM	12	12	36	36			8		
	C89070	C		CAMOUFLAGE SCREEN SUPPORT SYSTEM: WOODLAND/DESERT	24	24	72	72			8		
	C89145	C		CAMOUFLAGE SCREEN SYSTEM: WOODLAND LT WT RADAR SCAT W/O SPT SYS	24	24	72	72			8		
	D78555	A		DATA TRANSFER DEVICE: AN/CYZ-10	18	18	54	54			8		
	F40375	P		FIGHTING VEHICLE: FULL TRACKED INFANTRY HI SURVIVABILITY (IFV)	12	12	36	36			8		
	L44031	A		LAUNCHER GRENADE ARMAMENT SUBSYSTEM: M257	12	12	36	36			8		
	M51419	C		MISSILE SIMULATION ROUND: (TOW)	6	6	18	18			8		
	M92420	A		MACHINE GUN 7.62 MILLIMETER: FIXED RH FEED	12	12	36	36			8		

UNCLASSIFIED

LC2IEDM: 5 Basic Battlefield Entities
(Land C2 Information Exchange Data Model)

	Template	Initial Focus	Instance
1	Organization-T (Templates; e.g., T	Force Structure	Organization eal Units; e.g., w/ UICs)
2	Materiel-Typ Types of Objects w/ N	Logistics	Materiel al Objects w/ Serial #'s
3	Person-Typ Cat. of People; e.g.,	Personnel	Person Real People w/ SSNs

Facility-Type Cat. of Buildings	← IS_A Links	Facility Real Buildings w/ Addresses
Feature-Type Cat. Of Places	←	Feature Real Places w/ Numbers

Initial Subset of Interest

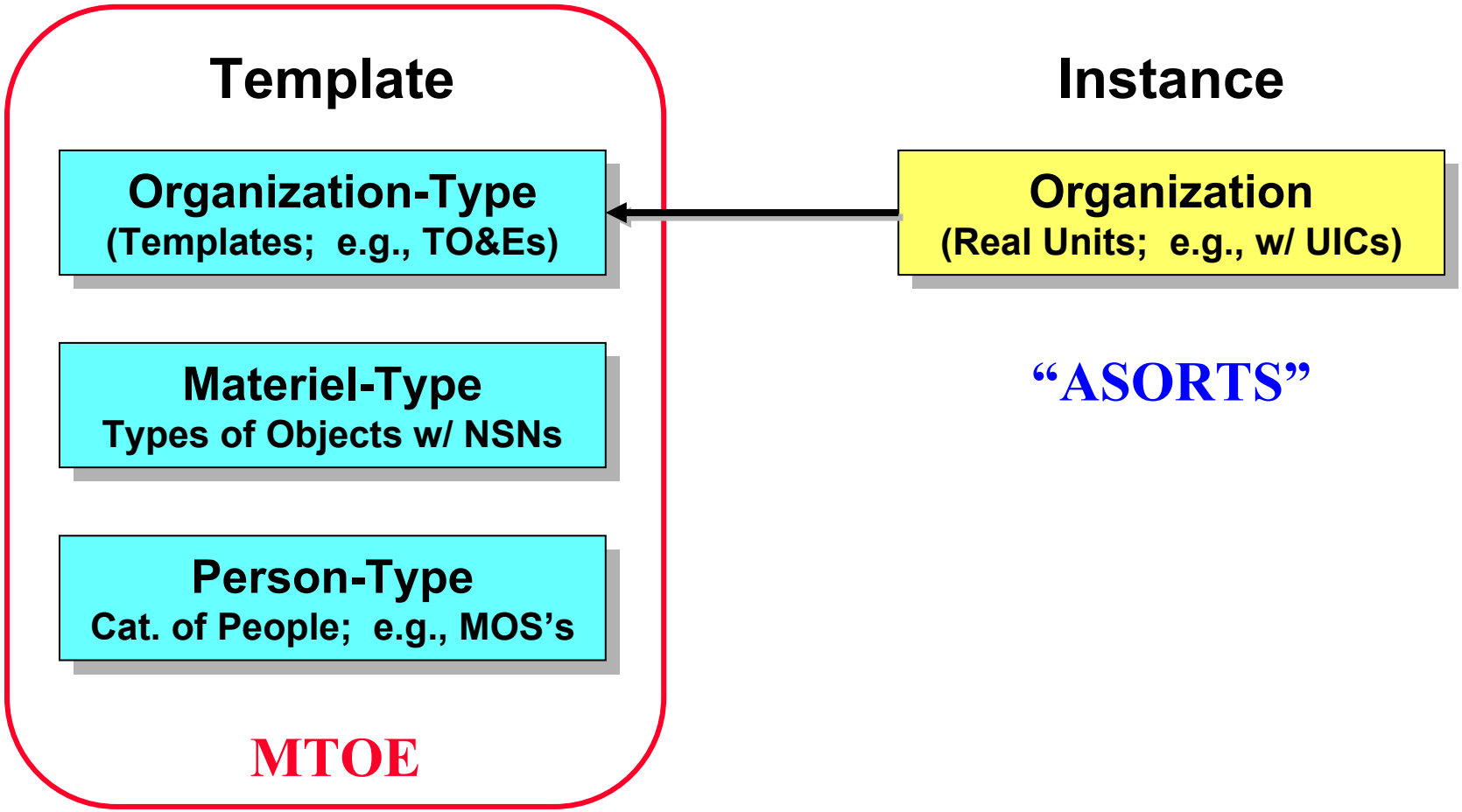

Org-Type Trees (Templates) vs Org Tree (Instances)

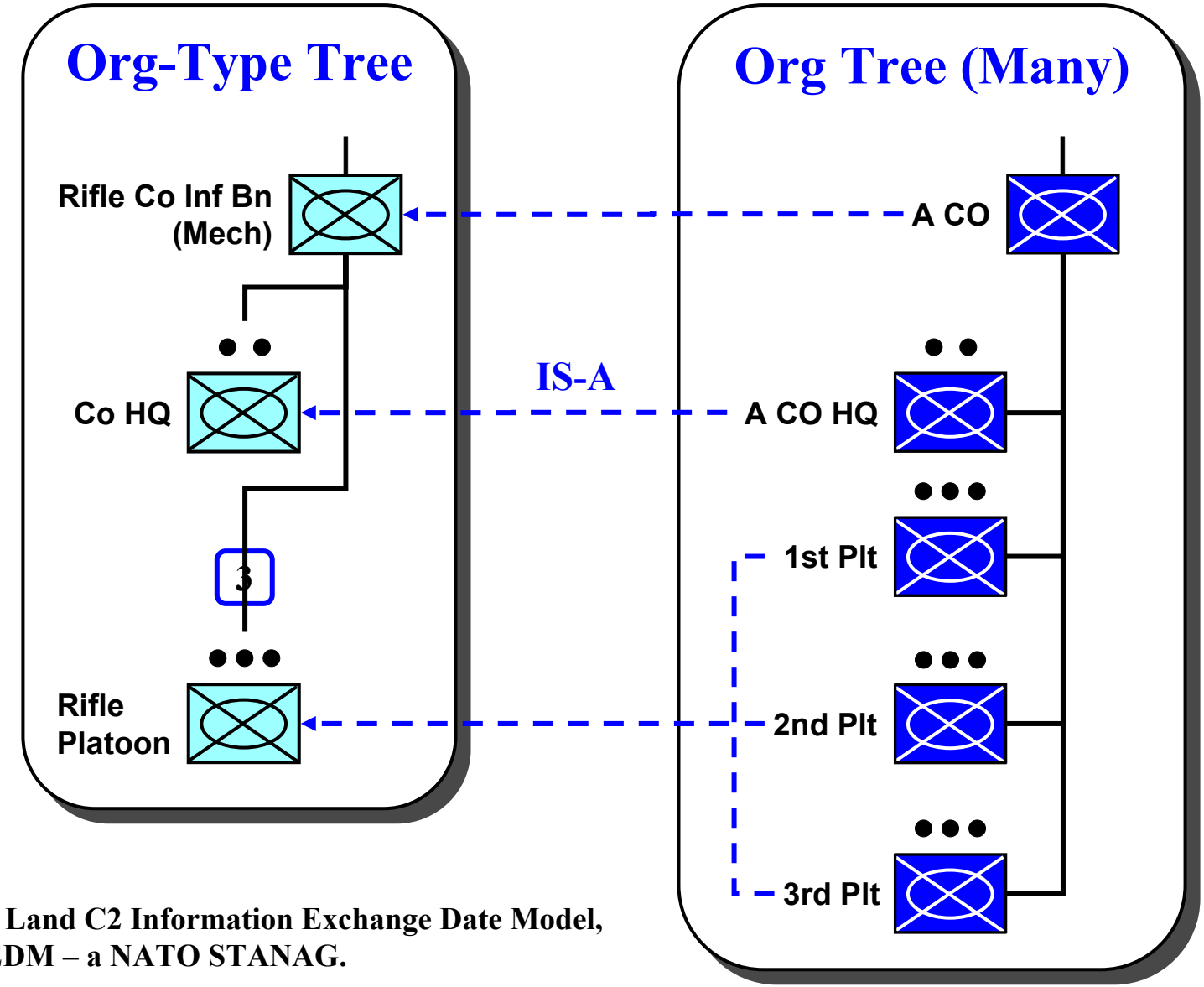

From the Land C2 Information Exchange Date Model, or LC2IEDM – a NATO STANAG.

A Possible Default Force Structure for "Tank Company A"

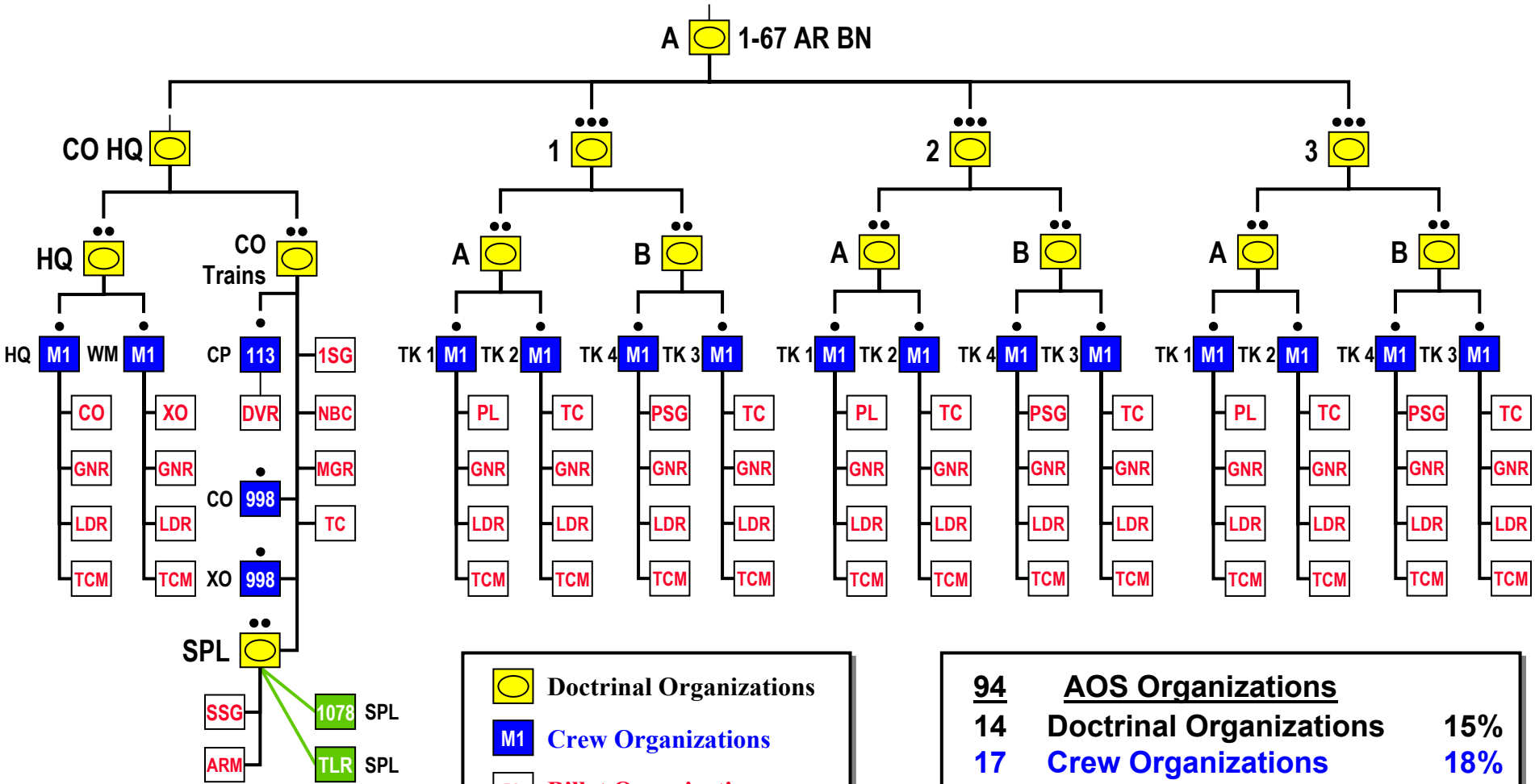

Doctrinal Organizations

M1 Crew Organizations

PL Billet Organizations

1078 Materiel (e.g., Vehicle)

Node Legend

94	AOS Organizations	
14	Doctrinal Organizations	15%
17	Crew Organizations	18%
63	Billets (5 OFF / 58 EN)	67%

MTOE Identification - Overloaded Definitions

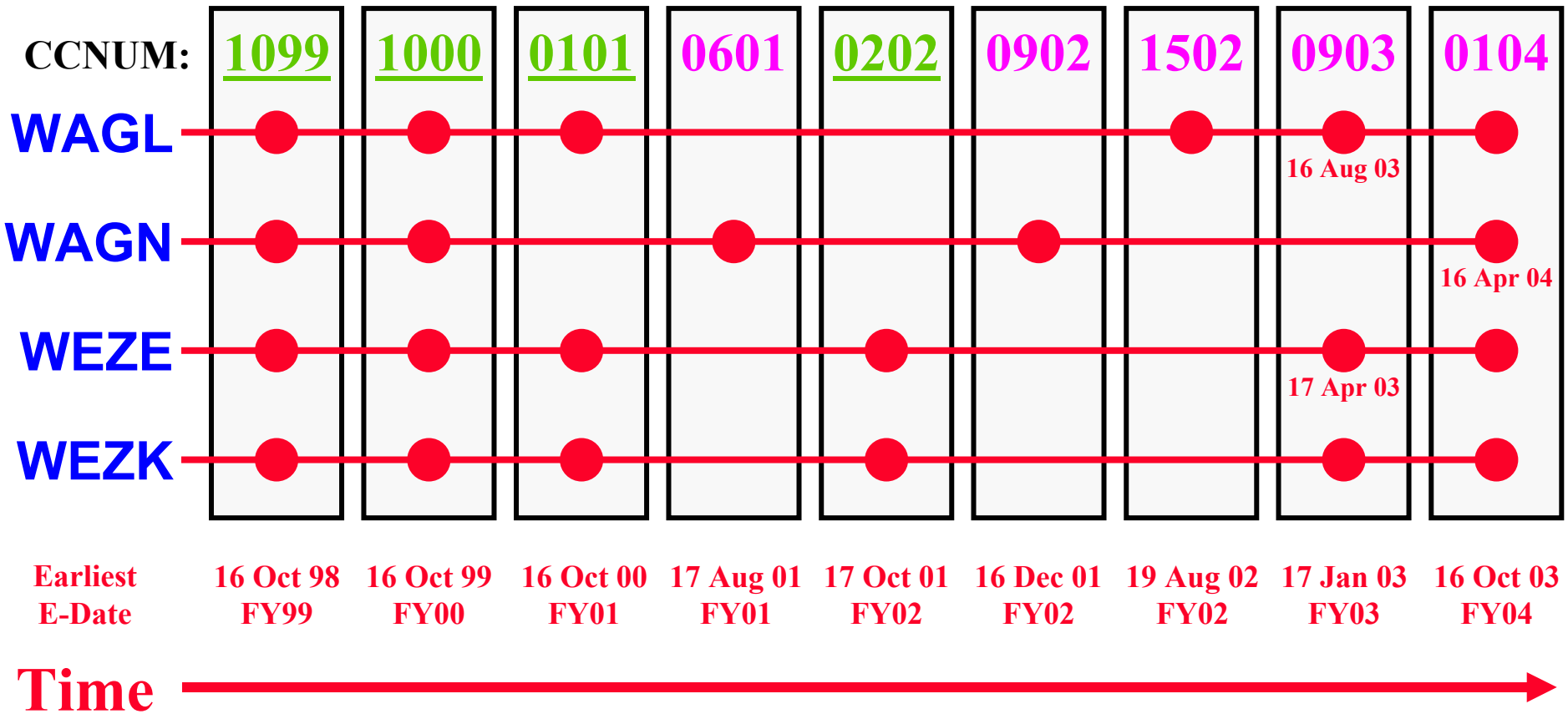

A DOCNO/CCNUM or UIC/EDATE uniquely identifies an MTOE

Question: Are there 9 or 23 MTOEs Shown? Problem is *Yes*!

Tree Graphs

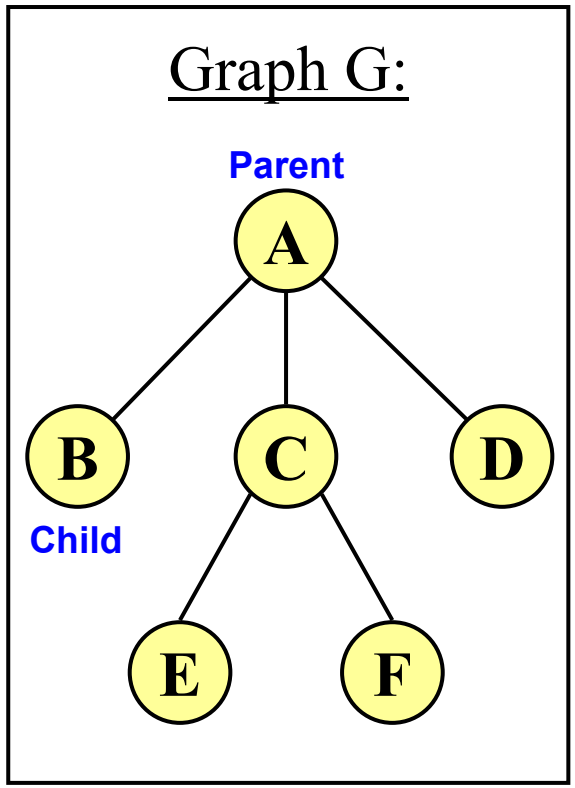

NODES **(or *vertices*): set V = { A, B, C, D, E, F }**

LINKS **(*edges*): set E = { (A,B), (A,C), (A,D), (C,E), C,F) }**

GRAPH**: collection of vertices and edges: G(V,E)**

A *Tree* structure is a "connected" graph with no "cycles," i.e., every node has at least one link to another node and only one path exists between any two nodes.

Via a link, a node can be a *parent* or a *child* of another node.

A node without a child is called a *terminal or leaf node* (e.g., the nodes at the bottom of the tree: B, D, E, and F)

A node with children is a non-terminal or *internal node* (e.g., A and C);

The *root node* is a special internal node with no parent (e.g., A).

Organization Charts are Trees (w/ boxes instead of circles)

(Often the name of the tree is inherited from the name of the root node - e.g., A):

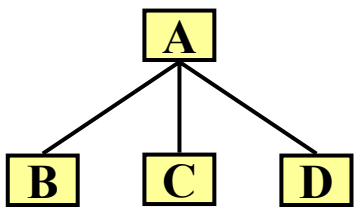

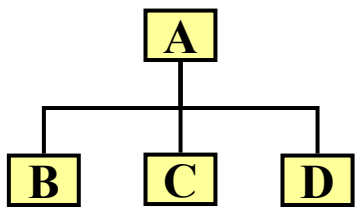

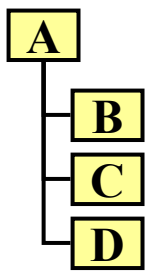

Labeled or Timed Tree Graphs

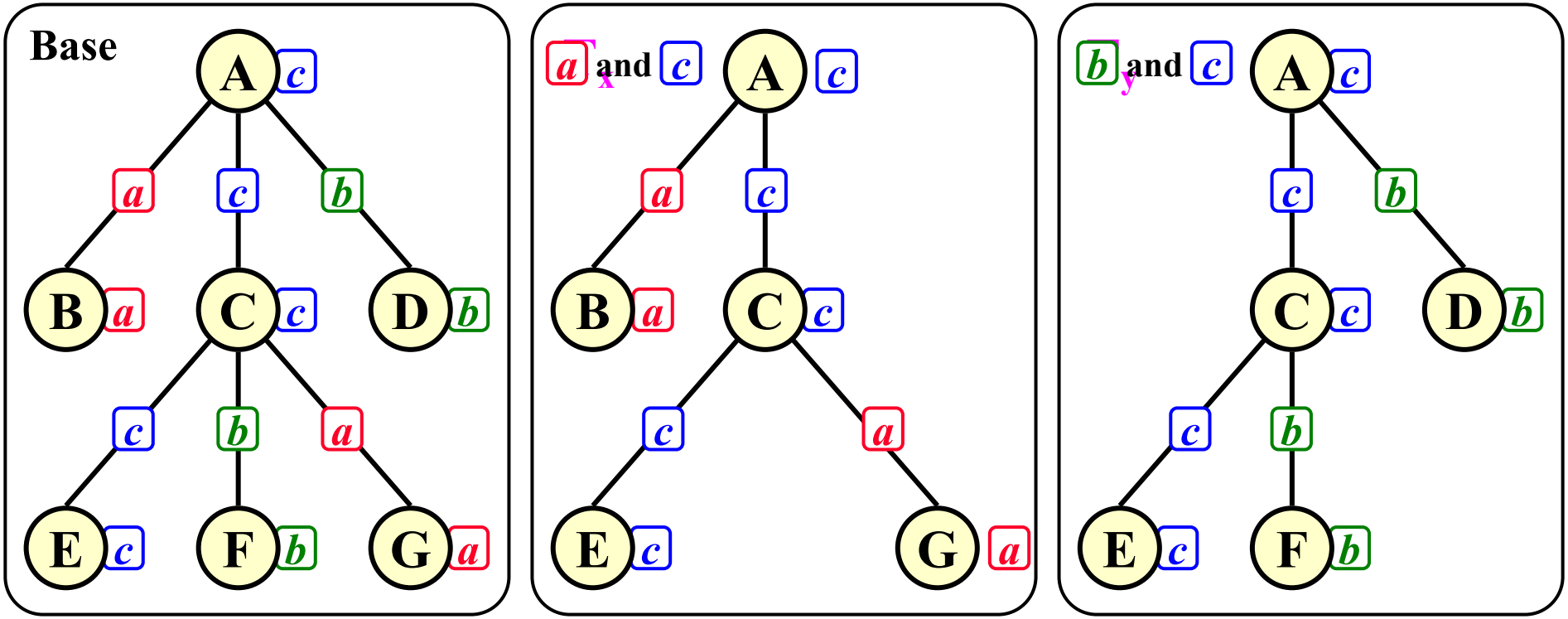

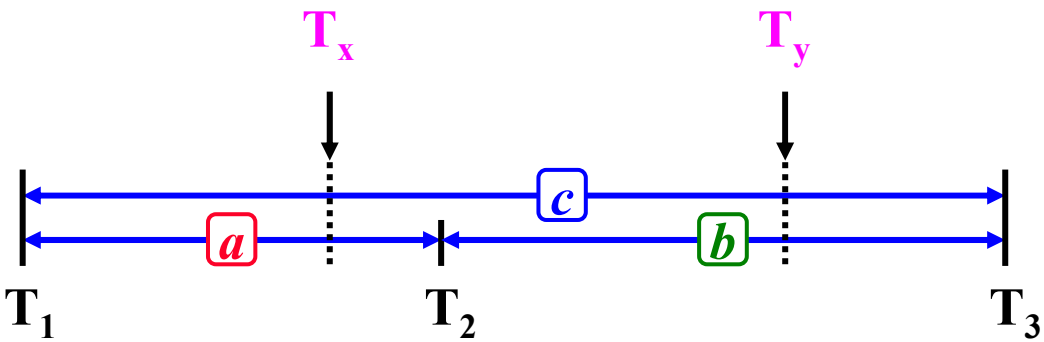

$$T_1 \le T_x < T_2 \le T_y < T_3$$

Stability with Time

- An interval is defined with a start_point (s_date) and an termination_point (t_date).
- Valid nodes/links are those whose associated time interval include a specified time.
- To continue to include a node or link in the tree, the t_date is simple extended to the current event horizon (the maximum value of any t_date in the graph).
- The default assumption is that all nodes and links continue to be part of the tree, which is the usual case.
- This results in stability as bona fide changes must be explicitly entered. There is no need to delete "obsolete" values.

Org Tree with Times

Org Tree:

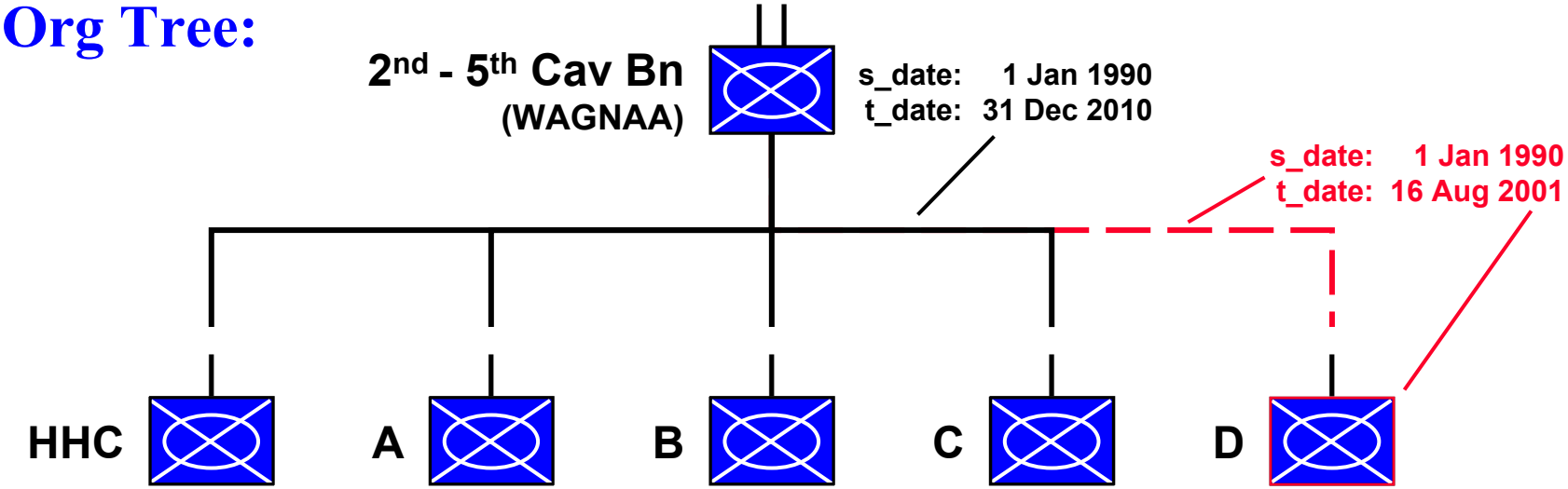

Transition from L-Series to F-Series Structure on 17 Aug 2001

Time is REAL time – it represents an Effective Date (EDATE)

Org-Type Trees with Times

Org-Type Tree:

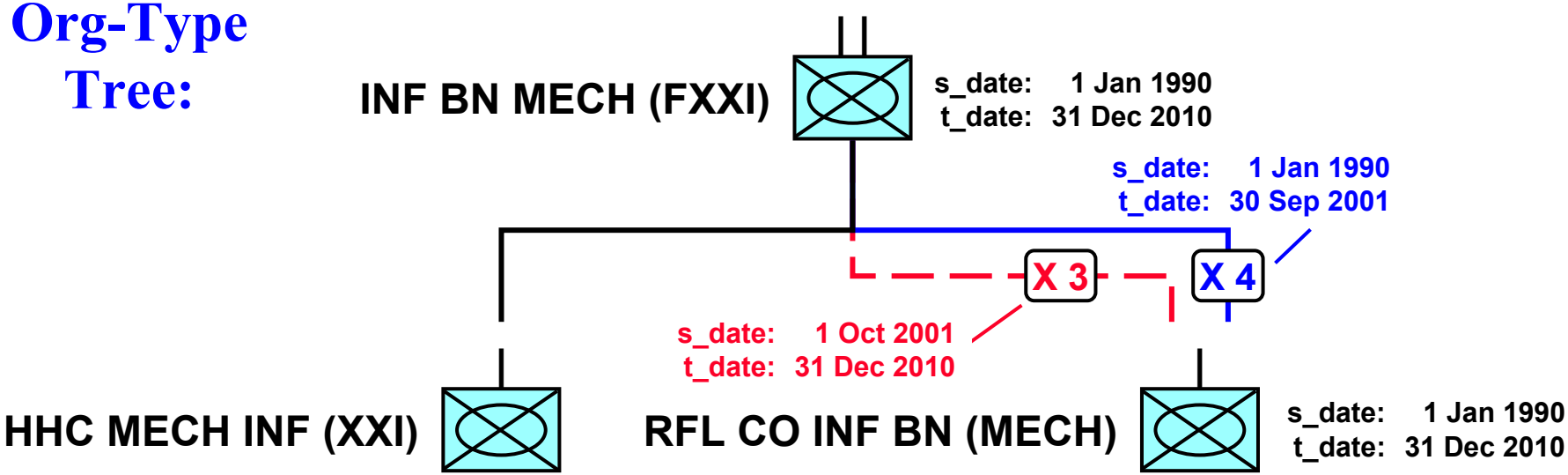

Modification from L-Series to F-Series Structure

Time is RELATIVE time – it represents a sequential state in the evolution of the tree (a monotonic increasing function). I named it a Modification Date (MDATE).

Time Extends to Attribute Entities Associated with Org-Type Nodes

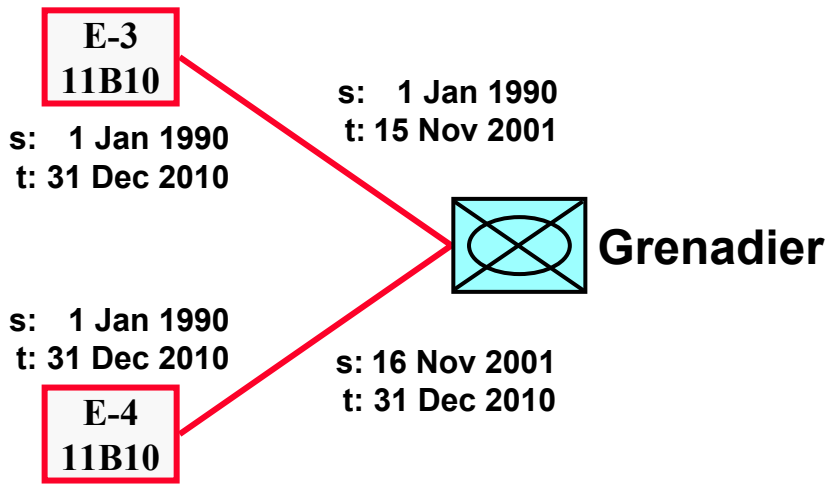

Person-Type : Org-Type

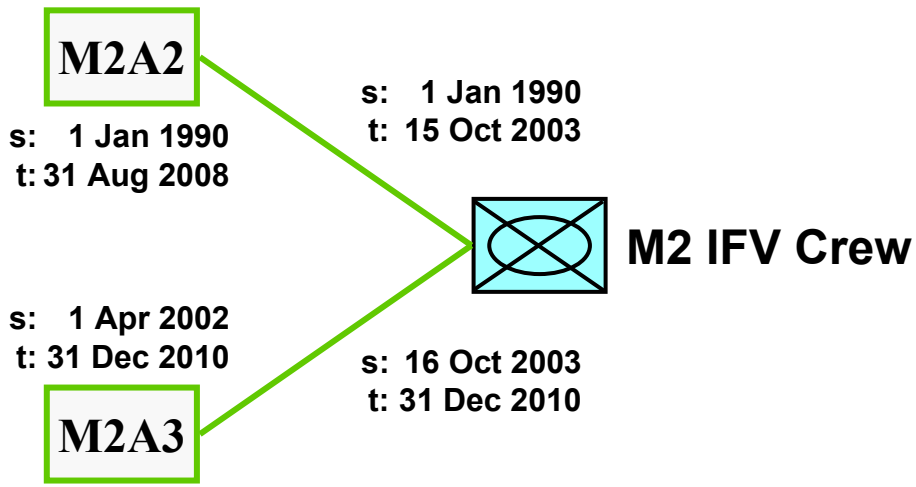

Materiel-Type : Org-Type

Time-Base "MTOE"

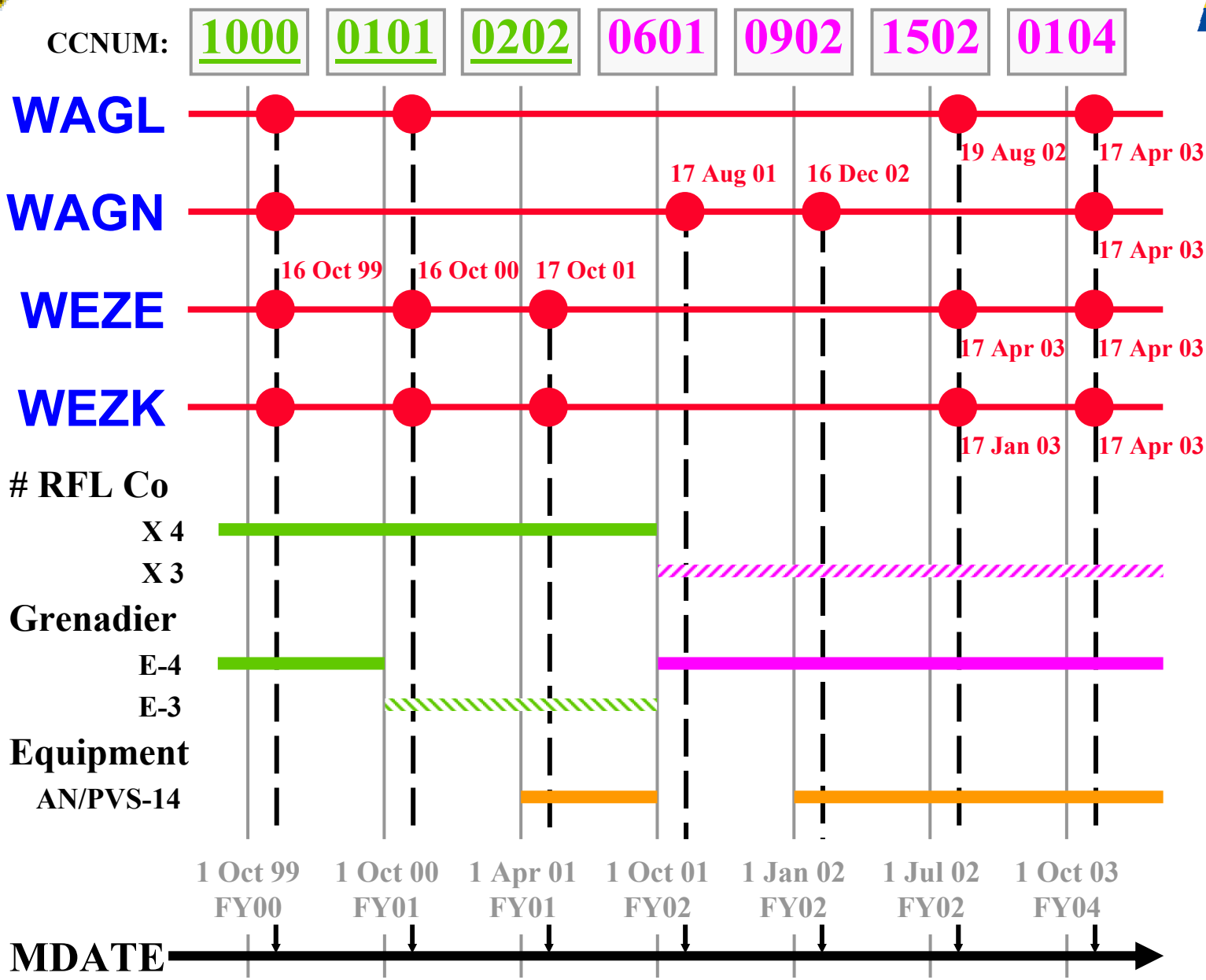

Time Between Org and Org-Type Nodes

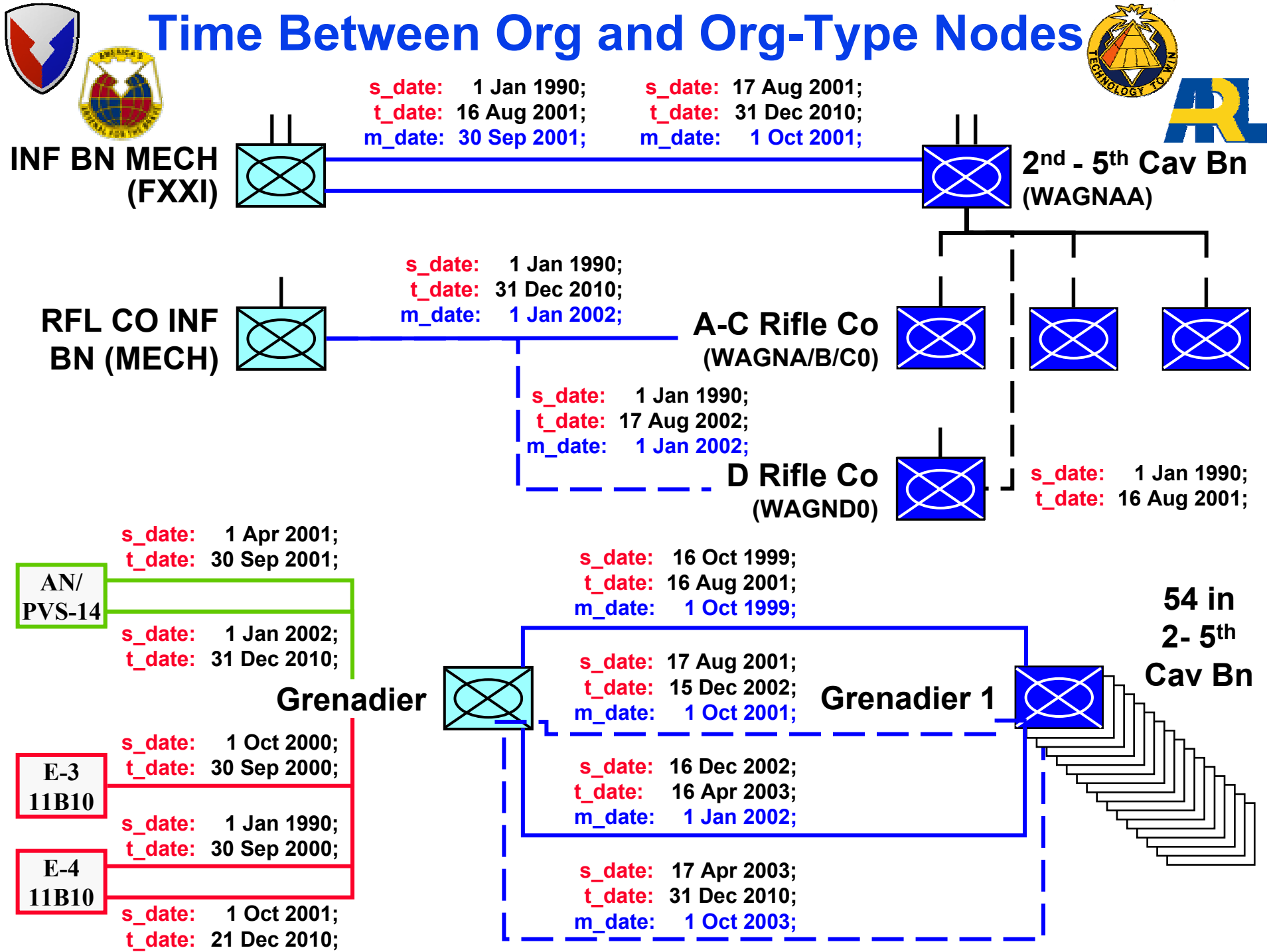

Summary

- Time-Based Tree Graphs can be used to provide a continuous, stable force structure representation suitable for use in digital battle command systems.
- This changes the way the Army documents its force structure – a major undertaking that affects nearly every system in the Army.
- It is an undergoing process that currently includes the Army G-3, G-8, G-6, PEO-C3T, and TRADOC with ARL technical assistance.