Decision Making and Data Fusion in an Interactive Adaptive UGS Network

Erland Jungert, Christian Jönsson, Per Klöör, Stan Zyra
FOA (Swedish Defence Research Establishment)
Box 1165, SE-581 11 Linköping, Sweden
+ 46 13 37 80 00
{jungert, chj, perklo, stanz}@lin.foa.se

Abstract

An approach to a system for an interactive adaptive unattended ground sensor network is proposed. The approach taken includes means for registration of information from a large number of sensors that are small and inexpensive. The communication throughout the network will be carried out by support from equipment of type Bluetooth. To support the users, an information system will be implemented. The information system will include means for activation and deactivation of sensors through a planning module with the ability to handle other resources in the net. Means for distributed sensor data fusion should be developed as well. Finally, a query language for multiple data sources should be designed and implemented. The query language will serve as a decision support tool and include means for uniform user interaction from various types of equipment.

1. **Introduction**

Networks of unattended ground sensors (UGS) have recently become subject to a lot of interest and the attention is predicted to grow in the years to come. The motivation for this is due to the technological evolution that has taken place during the last decade. This evolution does not cover just a single aspect but rather a series of different aspects which all will have an impact on the development of UGS. An example of a technical development of special concern is micro-electromechanical systems (MEMS) which can be used for development of new types of sensors. Generally, it can be argued that it is the development of new types of small, inexpensive, and low powered sensors that is leading the way towards new efficient ground sensor networks. The Bluetooth concept for communication is another novel technological development that will influence the development of ground sensor networks. Furthermore, the development requires other techniques for deployment of the sensors and their computational nodes, e.g. deployment can be made from various types of flying platforms or by grenades fired from various pieces of ordnance. Besides all this, more efficient computers are developed that will support the analysis and the fusion of sensor data. As a consequence, it will be possible to

develop various types of decision support tools. Such tools may be useful not only to the staff at a command and control centre but also to other categories of personnel of which some may be communicating via WAP telephones directly from the field. All these user categories will have different needs and require different types of support from the information system. Despite this, a kind of unified interaction technique must be available. An information system of this kind must obviously have capabilities for the distributed fusion of sensor data as well. The aspects mentioned here will subject to the discussions in this paper that proposes what is called an *interactive adaptive UGS* intended for such applications as surveillance and as a replacement of mine fields.

Since UGS is a relatively new area few research activities can be pointed out that cover all the aspects that were mentioned above. This is due to the fact that a UGS is quite a complicated type of system that with necessity will require contribution from such different areas as sensor development, communication and information systems design. For this reason, the system proposed here will not be able to cover all aspects of UGS. The primary research activities in this will mainly be concentrated on communication, information systems design including distributed sensor data fusion. The efforts concerning the development of new sensor types will, however, be somewhat limited. Work related to that described here are thus relatively few and the existing ones are neither covering all the aspects of the interval from sensors to decision support. The basic concern of these activities can be considered as mostly sensor oriented although the work described by e.g. [Clare et al., 1999] also covers the communication aspects. Of interest is also the work by [Burne et al., 2000] which is focusing on strategies for activation of a limited number of sensors in an array of microphones; this is to keep the energy consumption at a low level. This work is also concerned with tracking of ground vehicles. [Diehl et al., 1999] describe a system for automatic collaboration where the aim is simple constrained interactions between software agents using low complexity algorithms for perception and control. Such software agents should mainly be responsible for sensor data processing in individually sensing systems.

The work described in this paper is mainly structured as follows. Section 2 presents the basic problem definition of concern. In section 3 the structure of the proposed system is presented. The sensors of interest are briefly discussed in section 4. The communication techniques of interest are presented in section 5 while section 6 gives a brief overview of the approach to distributed fusion and the problems related to this area. The information system that includes the decision support tool, that is the query language for multiple data sources, which is one of the primary targets of the research activities is presented and discussed in section 7. Finally, the concluding remarks of the proposed work are given in section 8.

2. Problem definition

The primary purpose of the work described in this paper is a proposal for a decision support system for a network of unattended ground sensors, i.e. a UGS. The sensor network can be comprised both of sensors deployed from various air-born platforms and of sensors that may be manually deployed. The decision support system should primarily be made up by a query language for multiple data sources, integrated to an information

system that, among other things, should support the distributed data fusion of sensor information. There should be a strategy for determination of which sensor data that should be subject to fusion, i.e. which sensors should be active and collect sensor data from a certain area during a given period. This will, clearly, require a powerful planning technique. The query language should allow various queries that may include such operations as tracking, aggregation and prediction of possible future events. A constraint of particular importance concerns the limited energy resources available to the system. Furthermore, large amounts of data will be generated and must be handled. Consequently, particular attention must be shown to the development of the various techniques for sensor data analysis, fusion and other methods that may be time consuming from a computational point of view. Of course, this is primarily not due to the fact that there will be a shortage of computational resources per se. The system should be fairly general and be possible to apply to a large number of applications such as reconnaissance and as a substitute for mine fields.

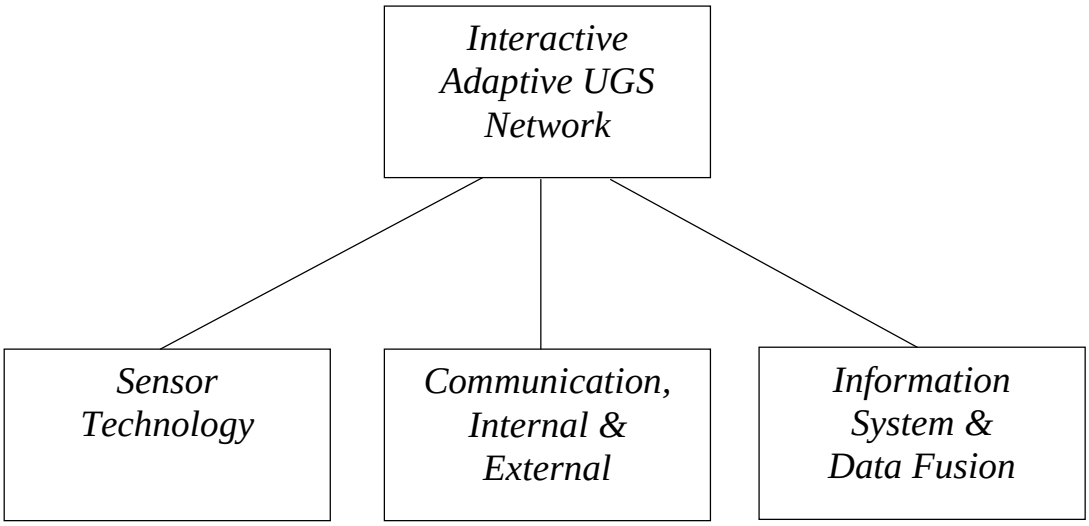

Figure 1. The structure of the IA-UGS system.

3. The basic structure of the system

The Interactive Adaptive UGS network (IA-UGS) is a surveillance system of interconnected ground sensors in a network. The purpose of the IA-UGS is to detect, classify, identify, and track objects within the covered area. The nodes will have sensing and communicating capabilities, as well as processing and fusion. The basic design should be of distributed type, thus avoiding a total breakdown at the loss of specific nodes. Since the basis for the decision support and for the information is "information pull" rather than "information push", the IA-UGS must be able to operate autonomously (no user interaction) as well as in an interactive and adaptive mode supplying information in response to specific queries from a user. A planning system will be needed to plan which nodes to be active, where to process and how to communicate data, etc.

The main parts of the IA-UGS are the sensor technology, the communication technology, the information system and the data fusion, see figure 1. Energy aspects are also important and will enter at all levels of the system. Remote and rapid deployment puts constraints on all parts of the system in terms of ruggedness, size, power, etc. Sensors have to be small, robust and have low power consumption. The communication system must deal with limited power and limited bandwidth, as well as with the requirements of self-organisation and adaptability. The information system will have to deal with large amounts of data as well.

The design of the separate system modules depends on the requirements of the functionality of the total system. The choice of sensors will affect the communication as well as the information system. From the end-users' perspective, the query types of concern indirectly reflect the actual choice of sensors. These aspects demonstrate that although the system is highly modular the design of the separate modules cannot be made independently. On the contrary, the system design phase must, for all the modules, be carried out more or less simultaneously and jointly.

4. The sensors

The backbone of a sensor net consists of its sensors. The conception of sensor is very extensive:

"*a device that senses either the absolute value or a change in a physical quantity such as … ... and converts that change into a useful input signal for an information-gathering system*"[1]

"*anything that is capable of registering physical quantities, as of light or temperature, and sending signals that indicate the level of the stimulus*"[2]

There are many ways in which sensors may be categorized. A division into the two categories *active sensor* and *passive sensor* is natural. The term passive refers to sensors that receive information without radiating revealing radiation. An active sensor uses a sensing method that radiates something that could disclose the sensor. The nature of the missions in which the sensor net may be used, often requires clandestine sensors, or at least sensors hard to detect. An awareness of the sensor presence will most likely cause some kind of countermeasure. The drawbacks of active sensors may not only reveal the presence of the sensors, but also the position and type. Typical countermeasures are jamming of communication or information-gathering, annihilation and tampering. Jamming is relatively easy as it in contrast to the annihilation does not prerequisite localization of the sensor. Tampering assumes much experience with that special kind of sensor and cognizance of its construction. To counteract interference the sensors may be made more rugged and resistant with incorporated protection. Another drawback of the

---

[1] McGraw-Hill, Dictionary of Scientific and Technical Terms, 1978, ISBN 0-07-045258-x

[2] WordNet ® 1.6, © 1997 Princeton University

active sensor is the higher energy consumption often requiring larger batteries or more complex controlling with sleep-states and wake-up logic.

Some sensors suitable for the use in a sensor net are listed below.

Passive sensors:

Acoustic:	Microphone, geophone, pressure, strain
Optical:	Image sensors, PIR-sensors
Field sensors:	Magnetic, field strength receivers, GPS, mm-wave
Radiation detectors:	Neutron radiation, gamma radiation
Chemical:	Gas sensors

Active sensors:

Optical:	Laser radar, image sensor (illuminating), IR-sensor
Microwave:	Radar
Magnetic field sensor:	Magnetometers
Multi point sensors:	Mechanical, optical

The ranking of the sensors depends, to a large extent, on the task set to the sensor net. It is an impossible task to give an exhaustive description of all the sensors in this context, the description will therefore confine itself to only two types, those described below. A discussion involving the other sensors may be done in much a similar way.

The most versatile information is generated by the image sensors. This information can be used to identify, classify and localize objects and their arming. The image information may also be processed to calculate the speed, moving direction, size, weight, etc. of the objects. Longer tracking range requires means to remotely control the looking direction and the focusing. Drawbacks are the dependability on sight and illumination and sometimes, the vast information amount. The information amount can be reduced by image compression and reduction of the image frequency. Bad light conditions may be improved by the use of light amplifiers and Near Infra Red (NIR) Covert Light. Smoke and fog are unfortunately insuperable obstructions and obstacles, provided that an image generating radar could not be used. The demand for visibility form a problem on positioning, a good observing position is, by nature, revealing. A good position may become a bad depending on weather or time of day making an image sensor totally blinded. The common counteraction, if any when observation is suspected, is the use of smoke. However, the smoke will probably be a hindrance to the enemy as well.

The acoustic sensor has the advantage of measuring a parameter very hard to conceal, namely the sound. The sound in a broad sense includes vibrations and pressure variations in the ground. All moving vehicles generate some kind of, more or less characteristic, sound signature. By acquisition of sound samples from interesting vehicles, a library of sound signatures may be built. In case of a registration of an unknown signature, this signature can be compared with known signatures from the library. Measures taken to minimize the sound signature will most likely results in a reduction of performance. This could be an increase in weight or a reduction in speed of conveyance. Countermeasures,

in order to aggravate the analysis, are rare and may involve interference, generating of false signatures and sneaking. The sneaking will help elude detection; the other actions will help detection.

By using a number of acoustic sensors with a data acquisition system and signal processing, it is possible to calculate the relative position of the sound source. A widely scattered distribution of acoustic sensors, in the area of interest, has advantages as high accuracy in determining position and a lower susceptibility to local interference. In fact, a random distribution is often very favourable, even if it has to be calibrated by some sort of distinct sound source. The more sensor elements in a net, the higher the security against dropouts due to failure or annihilation.

An acoustic sensor system in conjunction with an image sensor turns out very well. In such a system the detection and localization may be done by the acoustic sensors and the obtained information could direct an image sensor in order to do a closer study including identification.

The more sensors a sensor net consists of, the better. The conditions for synergy will increase. Redundancy in the number of sensors will decrease vulnerability. Not taken into account here are price, complexity, communications and signal processing.

5. Communications

The communication solutions needed in an interactive adaptive unattended ground sensor network, IA-UGS net, can be categorised in two classes. These classes are dependent on the deployment scenario. It is either a distance-deployed, for example, air-dropped, non-supervised by onsite personnel, *ad hoc* system or a manually deployed, maintained and protected by personnel, *fixed* system. Both classes need communications solutions for their *internal* needs to share data and computational resources and *external access* for humans' and systems' access to the knowledge held by the network and control of the network.

5.1 Ad hoc system

The ad hoc communications system supporting an IA-UGS net, needs to be able to fulfil certain requirements. It should be self-organising to be deployable with a minimum of human interaction, it has to allow nodes and/or parts of the network to enter a sleep mode and to wake up from it too. Furthermore, in order to support the disposability goal, it should be cheap. That is, it is beneficial for the whole systems concept if the supporting communications network is based on commercial off the shelf (COTS) products. However, sensor nets need to be operable under electronic surveillance (ES) environments and to be able to survive in electronic attack (EA) conditions. So COTS products may need to be adapted to endure such a hostile environment, or it might not even be an economically viable solution at all to base the communications system on commercial off the shelf products. The communications system has to not only support the internal communication needs of the sensor net, but also has to provide access to

external users of information carried in the sensor net. This external interface must be provided to nearby users as well as faraway, and even mobile, ubiquitous users.

The technological aims of the ad hoc communications system should include a low probability of intercept, LPI, behaviour to be able to meet the ES threat. A possibility to survive hostile jamming, to meet the EA threat and to support the capacity requirements put onto the IA-UGS by the sensors and the data fusion required, a quality of service in terms of required capacity, maximum tolerable latency and robustness due to annihilated nodes, are required. For example, robust routing, energy efficiency such as optimal transmitter power and routing will be needed. A possibility to dynamically densify the IA-UGS net by adding nodes to an already established network must be possible as well.

In this project, we would like to experiment with some commercial communication systems and techniques to better understand the IA-UGS systems' need for communications. Such systems might be the Bluetooth system and WAP telephony techniques. However, it must be stressed already here that these systems as is do not fully meet tactical requirements foreseen. An improved range Bluetooth, that is, Bluetooth II, might be required. Furthermore, improved electronic protection capabilities of Bluetooth might also be available.

Interesting techniques supporting the web-alike functionality of the IA-UGS user interface include mobile ad hoc network routing techniques such as the MANET, [Corson & Macker,1999]. Various draft protocols as described in TORA [Park & Corson, 1999], AODV [Perkins & Royer, 2000], DSR [Broch et al., 1999], ODMRP [Lee et al., 2000], OLSR [Jacquet et al., 2000], INSIGNIA [Ahn et al., 1999], RDMAR [Aggelou & Tafazolli, 1999] and STAR [Garcia-Luna-Aceves et al., 1999]. Other interesting developments can be seen in the energy efficient routing domain, for example [Pursley et al., 1999], [Raghavan et al., 1999], [Wieselthier & Nguyen, 1999], and [Redi & Welsh, 1999].

5.2 Fixed systems

For the fixed system, any kind of wired communications support is viable although one is not limited to wire line solutions only. It is possible to use optical fibre cables. The main advantages of using optical fibre are that it has as a large transmission capacity, optical fibres do not emit energy for electronic surveillance systems to detect, it is not vulnerable to an electronic attack and hence does not need additional electronic protection taking large part of the capacity. Furthermore, such a system could very well be based on commercial off the shelf products. An interesting solution would then be asynchronous transfer mode, ATM, where a virtual connection-oriented technique is used allowing for quality of service modes for real-time connections in the sensor net. This specific feature might be exploitable by the data fusion functionality of the network.

.

6. Distributed fusion

Distributed data fusion should be possible to convey in the nodes with a high degree of computational power. The motivation for this is primarily to diminish the information volumes that need be transmitted across the net either from a node to another or from a node to a command and control centre. That is, sensor data must be filtered and fused in such a way that the information volumes are heavily reduced without loss of relevant information before it is transmitted over the net. To accomplish this, a technique for distributed fusion must be developed. However, this is by itself not sufficient; an information structure that can be used in the data fusion process both locally and in a distributed way must be available, i.e. a structure that permits fusion between data from more than one node must be available. Clearly, such a structure should be homogeneous. The structure chosen here is a web page like structure. The motivation for the use of such a structure is that it will allow an extraction of pages with respect to their source at the same time as they can be sorted with respect to the time of generation. At the same time the pages can be transmitted to other nodes in the network and fused directly with other sensor data organized in the same way. The organization of the page like structure is further discussed in [Jungert, 2000].

Basic problems related to the distributed fusion are primarily, what should be transmitted from a certain node and which node should conduct the fusion process and finally which information should be fused at a certain stage. Furthermore, it is quite clear that to respond to these problems, a planing tool is required. Such a planning tool must take all the available resources into account, which concern things like which sensors should be active in a certain situation and at a certain time. These problems relate to the energy saving problem. To save as much energy as possible just a fraction of the sensors should be active during a certain period. Whether a sensor should be active or passive does not depend on the availability of computational power; it rather depends on which sensors are best suited for the registration of the target with respect to the type of targets in focus, the position of the target and the actual geography. Sensors made active during a certain time interval may be connected to different nodes. Consequently, the planing tool must work in two steps. The first step determines which sensors that should be active. This step is followed by data acquisition and once the data has become available it can be pre-processed. The planner can in the next step determine which location should host the fusion process. A further aspect of importance here is that it is the query language (see section 7) that should determine whether any information should be fused. Thus, if the applied query does not request fusion of sensor data, clearly no fusion will be performed. Once this is resolved, the planner decides where to carry out the fusion. Hence, the planner and the query system must interact with each other to determine the location of the data fusion process. Nevertheless, it is still the planner alone that decides which sensor types and which particular sensors that should be active although this is strongly influenced by the given query.

Other problems that relate to distributed fusion are the scalability factor and the pedigree problem. Scalability concerns how the network should be enlarged with respect to the number of sensors and sensor types. In other words, what happens when the number of sensors is increased, say, from just a hundred up to some thousands and what are the

consequences of the integration of new sensor types. This will obviously have consequences to both the planner and the query system. The pedigree problem occurs when data are fused and transmitted across the network in an uncontrolled way. For instance, how will the result of the fusion process be affected when data are stepwise fused and transmitted such that eventually an attempt occurs to fuse an intermediate result with new information from a sensor that delivered information to the process at an earlier moment. These two aspects must, of course, be subject to further research.

7. The information system

In the information system discussed here a query language for multiple sensor data sources of heterogeneous type will serve as the primary decision support tool. The query language is called □QL [Chang et al., 1999]. An important aspect of query languages of this type is that means for fusion of sensor data must be included [Jungert, 2000]. It should thus be possible to automatically carry out the fusion of the information acquired from the sensors based on the data models of the queries. Another important characteristic of the query language is to allow queries, which from the user's point of view are independent of the data sources. To make this possible the query system must be able to handle uncertain information originating from sensor data. For this reason, means for handling probabilities and various belief or confidence values must be available that eventually can be handled by the fusion process. To allow a simple and efficient manipulation of the query system a conceptual model that permits the user to design and apply the queries must be available as well.

□̃ı□QL

The spatial query language, □QL uses heterogeneous input data originating from various types of sensors. Sensor data are transformed into a unified spatial/temporal information structure that can be used for reasoning on a high abstraction level, by means of various operators used to build up the queries. Input data to the operators are represented in a unified structure. The information is provided to □QL in continuous streams of data that correspond to abstract (symbolic) information of spatial/temporal/logic type. Operations for consistency checking and information fusion must be available, so that the symbolic information can be used as input to the queries or sub-queries. Queries in □QL are basically made up by sequences of the spatial/ temporal operators, called □-operators [Chang et al., 1999], which easily can be translated into □QL-syntax. □QL is a natural extension of SQL and allows the specification of spatial/temporal queries that can operate on the multiple heterogeneous data transformed into a unified information structure on a high abstraction level, which eliminates the need to write different queries for data from the various data sources.

Symbolic Projection [Chang & Jungert, 1996] is a qualitative spatial data structure which together with some other qualitative structures is used in □QL as the basic symbolic and unified data structure. Symbolic Projection was originally proposed by [Chang et al., 1986] for iconic indexing. In this method, space is represented by a set of strings. Each string is a one-dimensional formal description of space, including all existing objects, and

their relative positions viewed along the corresponding co-ordinate axis in symbolic form. This representation is qualitative as it corresponds to sequences of projected objects and their relative positions. In this work, Symbolic Projection is proposed as the main information structure in the queries since we believe that the qualitative methods constitute a powerful means for manipulation of the large quantities of inhomogeneous data generated by the sensors. However, this does not exclude the use of traditional quantitative methods.

A simple example of the *Fundamental Symbolic Projection* (FSP) is given in figure 2a, where the U-string corresponds to the projections along the x-axis and the V-string corresponds to the projections along the y-axis. The object *A* is to the left of the objects *B* and *C*, which both have the same x co-ordinates. The U-string thus becomes $A < C = B$, and the V-string is obtained in an equivalent way. A drawback with this approach is that it simplifies the objects into points and for that reason much of the resolution in the image is lost. Figure 2b illustrates an alternative projection method called the *Interval Projection* method, where instead the endpoints of the objects are encoded in the projection strings. This technique represents the object in a higher resolution, i.e. instead of representing the objects as points they are represented with their minimal enclosing rectangles. This is clearly an improvement. The pair, (U,V) of projection strings symbolically describes a given image with respect to the identified objects, including the relative positions of the objects and their interrelationships. The different variations of Symbolic Projections are more completely described in [Chang & Jungert, 1996]. However, since Symbolic Projection only permits the description of the relative position of the objects and their interrelations but not their object descriptions other means for this must be available. Hence, a method called qualitative slope descriptors [Jungert, 1996] has been developed.

Symbolic Projection is used in □QL as a means for determination of objects and spatial relations extracted by a spatial query. However, there is also the dual form in which queries are expressed as sequences of □-operators. A □-operator, when applied to a data source, simply corresponds to a *select* function whose result corresponds to an arbitrary projection string. The $\tilde{\square}$ operator indicates that the selection is made according to the information-lossless default clustering mechanism. To select the x-axis, $\square_x = \square_x(x_1,..., x_n)$ is applied to the search space and with this notation it is simple to show that $(\square_x, \square_y)$ is exactly the same as the pair of symbolic projection strings in (U,V). More completely, □QL is intended for queries generating results of the following types:

- object classification,
- object attributes,
- locations/positions of objects,
- events (when did a certain event occur),
- moving patterns (change in position, tracks etc.),
- spatial object relations,
- object orientations,
- aggregation of sets of objects

To accomplish the various operations, the object space in focus needs to be split up into customary sub-spaces, which the query language can deal with. Such a sub-space is called a cluster. A cluster is consequently a subset of the space spanned up by the various dimensions of the information universe available to the system.

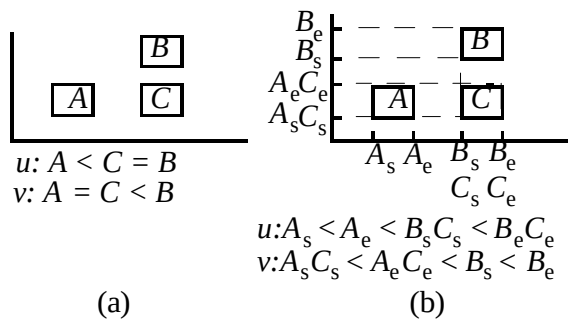

Figure 2. The original approach to Symbolic Projection including the projection strings (a) and the same scene applied to interval projections (b)

For the image (im_1) in Figure 2a, the projection method corresponds to the Fundamental Symbolic Projection and the result of the application of the $\square_x$-operator becomes:

$$\square_x im_1 = \square_x x_1 x_2 im_1 = (U{:}\ A < B = C)$$

The corresponding projections in the y-direction becomes:

$$\square_y im_1 = \square_y (y_1, y_2) im_1 = (U{:}\ A = B < C)$$

It is possible to refine the $\square$-query further by sequentially applying new $\square$-operators. In such a query it is, for instance, possible to ask for object relations such as "*which is the position of object B relative A*", which yields the result that "*B is at the upper right of A*" or "*B is to the north-east of A*". The corresponding $\tilde{\square}$query thus becomes:

$$\square_{direction}(N_E)(\square_x, \square_y) im_1$$

The above query may, in terms of $\square$QL, be expressed as:

```
SELECT direction
CLUSTER (* ALIAS D(ANY_0, ANY_1))
FROM SELECT x, y
CLUSTER *
FROM im1
WHERE (N-E ANY_0 ANY_1)
```

The WHERE-clause determines the actual relationship, D(ANY_0, ANY_1), that is the pattern indicating a relationship of binary type or more specifically the 'direction'

between pairs of objects. The * corresponds to a default clustering along the x and y co-ordinates. Observe that the existence of other object pairs with the same relationship will be determined as well.

Both input and output of the □-operators are generally represented as single or multiple symbolic strings. This is also true for the object relation queries defined in [Chang & Jungert, 1998], e.g. for directions, as in the example above. A more extensive example of □QL, including the corresponding □-operator sequence, can be found in [Chang et al., 1999] or [Jungert, 2000]. The example displays the occurrence of the association problem and its consequences that eventually requires a technique for fusion of information originating from multiple heterogeneous data sources.

7.2 The conceptual data model

A conceptual data model to support the users in their interaction with the distributed data is required for two reasons. The users will need a conceptual framework in their efforts to build up a relevant and semantically correct query but there must also be an internal structure that tells whether a certain query structure is permitted or not. The conceptual means necessary for this should be limited and straightforward. It turns out that the conceptual aspects can be limited to a time interval for a specified space together with a set of objects, their attributes and a set of binary relations. Finally a conceptual user query structure is needed as well. The latter aspect concerns the existence of objects, aggregation and tracks of objects while the former aspects are merely subject to determination of system attributes that quite often must be given by the users themselves. The users must obviously give these system attributes when asked for by the system. Hence, a query may in principle correspond to the search in a multi-dimensional spatial/temporal *room* where in a set of steps applied by the □-operator sequence the dimensionality is stepwise reduced down to a level where the remaining dimension(s) exhibit the result of the query. At the same time as this reduction is applied, the user-defined attributes are taken into consideration as well. To reach this level and to secure the result aspects of uncertainty in sensor data must be considered in the process. Furthermore, a mechanism for fusion of sensor information at various steps of the query process must be available and applied whenever necessary [Jungert, 2000].

7.3 Interactive media types

Access to the information system should be allowed from a large variety of interactive media, e.g. through equipment like WAP telephones, transparent goggles for visualization of augmented realities. Interaction by means of traditional computer interfaces should be allowed as well. These media should permit interaction with the information system by using the concepts outlined above and in a way that may be based on a gesture–based interactive approach. Consequently, the query language should be viewed as a unified interactive query system with an interface that is independent of the media type. Furthermore, the unified interactive query system should allow access to all kinds of sensor data, i.e. not just to the sensors in the UGS network but also to data from

sensors carried by other platforms such as UAVs, helicopters, etc. Of course, this has a number of consequences that must be considered. For instance, the usage of different platforms with various missions must permit the adaptation of the sensors so that the system should have the ability to position a specified sensor to an area in focus. However, the ground sensor network described here is the primary target for the query system.

8. Conclusions

The proposed UGS system described in this work is primarily focusing on three aspects of a ground sensor net, i.e. sensor technology, communication and an information system. The problems related to the sensor technology are concerned with how to build arrays of a large number of inexpensive and small sensors that are light in weight and easy to deploy. The communication part of the system will be concerned with how to communicate by means of, for example, Bluetooth whereas the information can be split up into three different parts. The three parts of the information system are a module for resource planning, a decision support system with a powerful query mechanism and means for distribution of the sensor data fusion process. The proposed UGS system can be applied to applications like surveillance, as a warning system that may replace minefields and for military operations in urban terrain (MOUT).

The proposed system is at the moment just in the beginning of its evolution and will in the near future be subject to several different research activities. Activities that will be subject to special attention are e.g. the design of the resource planning subsystem and the attached query language including a subsystem for distributed data fusion. Other problems to be focused on are the communication network and the determination of the actual sensor types that should be integrated into the system. In the latter aspect, analysis of sensor data will become a particular problem. In parallel to most activities, the energy saving problem must be focused on since lack of support in this regard may cause inadequate functionality and delimit the availability of necessary information.

References

[Aggelou & Tafazolli, 1999] G. Aggelou and R. Tafazolli. *Relative Distance Micro-discovery Ad Hoc Routing (RDMAR) Protocol*. http://ftp.sunet.se/pub/Internet-documents/internet-drafts/draft-ietf-manet-rdmar-00.txt, September 16, 1999.

[Ahn et al., 1999] G.-S. Ahn et al. *INSIGNIA*. http://ftp.sunet.se/pub/Internet-documents/internet-drafts/draft-ietf-manet-insignia-01.txt, October 28, 2000.

[Broch et al., 1999] J. Broch et al. *The Dynamic Source Routing Protocol for Mobile Ad Hoc Networks*. http://ftp.sunet.se/pub/Internet-documents/internet-drafts/draft-ietf-manet-dsr-03.txt, October 28, 1999.

[Burne et al., 2000] R. A. Burne, A. L. Buczak, I. Kadar and E. R. Eadan. *Self-Organizing Cooperative UGS network for Target Tracking.* Proceedings of SPIE conference on Unattended Ground Sensor Technologies and Applications II, Orlando, FA, April 26, 2000.

[Chang et al., 1987] S.-K. Chang, O. Y. Shi and C. W. Yan. *Iconic indexing by 2D strings*. IEEE transactions on Pattern Analysis and Machine Intelligence (PAMI), Vol. 9 No. 3, 413-428 (1987).

[Chang et al., 1999] S.-K. Chang, G. Costagliola and E. Jungert. *Querying Multimedia Sources and Databases*. Lecture Notes in Computer Science, D. P. Huijsmans and A. W. Smeulders (Eds.), Springer Verlag, Berlin, 1999, pp 19-28.

[Chang & Jungert, 1998] S.-K. Chang and E. Jungert. *A spatial/temporal query language for multiple data sources in a heterogeneous information system environment*, the International Journal of Cooperative Information Systems (IJCIS), vol. 7, Nos. 2 & 3, 1998, pp 167-186.

[Clare et al., 1999] L. P. Clare, G. J. Pottie and J. R. Agre. *Self-Organizing Distributed Sensor Networks.* Proceedings of SPIE conference on Unattended Ground Sensor Technologies and Applications, Orlando, FA, April 8-9, 1999, pp 229-237.

[Corson & Macker, 1999] S. Corson, J. Macker. *RFC-2501 Mobile Ad hoc Networking (MANET): Routing Protocol Performance Issues and Evaluation Considerations.* http://www.rfc-editor.org/rfc/rfc2501.txt, January 1999.

[Diehl et al., 1999] Ch. P. Diehl, M. Saptharishi, J. B. Hampshire and P. K. Khosla. *Collaborative Surveillance Using Both Fixed and Mobile Unattended Ground Sensor Plattforms.* Proceedings of SPIE Conference on Unattended Ground Sensor Technologies and Applications, Orlando, FA, April 8-9, 1999, pp 178-185.

[Garcia-Luna-Aceves et al., 1999] J.J. Garcia-Luna-Aceves et al. *SOURCE TREE ADAPTIVE ROUTING (STAR) PROTOCOL*. http://ftp.sunet.se/pub/Internet-documents/internet-drafts/draft-ietf-manet-star-00.txt, October 27, 1999.

[Jacquet et al., 2000] Ph. Jacquet et al. *Optimized Link State Routing Protocol*. http://ftp.sunet.se/pub/Internet-documents/internet-drafts/draft-ietf-manet-olsr-01.txt, February 7, 2000.

[Jungert, 2000] E. Jungert. *A data fusion concept for a query language for multiple data sources.* Proceedings of the 3rd international conference on information fusion (Fusion 2000), Paris, France, July 10-13, 2000.

[Jungert, 1996] E. Jungert. *A qualitative approach to recognition of man-made objects in laser-radar images.* Proceedings of the 7th Int. Symposium on Spatial Data Handling, SDH'96, Delft, The Netherlands, Aug 12-16.

[Lee et al., 2000] S.-J. Lee et al. *On-Demand Multicast Routing Protocol (ODMRP) for Ad-Hoc Networks*. http://ftp.sunet.se/pub/Internet-documents/internet-drafts/draft-ietf-manet-odmrp-02.txt, January 5, 2000.

[Park & Corson, 1999] V. Park and S. Corson. *Temporally-Ordered Routing Algorithm (TORA) Version 1 Functional Specification*, http://ftp.sunet.se/pub/Internet-documents/internet-drafts/draft-ietf-manet-tora-spec-02.txt, October 28 1999.

[Perkins & Royer, 2000] C. Perkins and E. Royer. *Ad Hoc On Demand Distance Vector (AODV) Routing*. http://ftp.sunet.se/pub/Internet-documents/internet-drafts/draft-ietf-manet-aodv-05.txt, March 14, 2000.

[Pursley et al., 1999] M. B. Pursley, H. B. Russell and J. S. Wysokarski. *Energy-Efficient Routing in Frequency-Hop Networks with Adaptive Transmission*. proceedings of 1999 IEEE Military Commun. Conf. MILCOM 99.

[Raghavan et al., 1999] A. R. Raghavan, C. W. Baum and H. B. Russell. *A Distance-Vector Routing Protocol with Consistency Checking for Mobile Distributed Direct-Sequence Packet Radio Networks*. Proceedings of 1999 IEEE Military Commun. Conf. MILCOM 99.

[Redi & Welsh, 1999] J. Redi and B. Welsh. *Energy-Conservation for Tactical Robot Networks*. proceedings of 1999 IEEE Military Commun. Conf. MILCOM 99.

[Wieselthier & Nguyen, 1999] J. E. Wieselthier, G. D. Nguyen. A. Ephremides*Algorithms for Energy-Efficient Multicasting in Ad Hoc Wireless Networks.* proceedings of 1999 IEEE Military Commun. Conf. MILCOM 99.