The Role of Ontology in System-of-Systems Acquisition

Israel Mayk, D. Eng. Sc.
Israel.Mayk@us.army.mil
RDECOM, CERDEC C2D
Fort Monmouth, NJ, USA

Azad M. Madni, Ph. D.
amadni@intelsystech.com
Intelligent Systems Technology, Inc
Santa Monica, CA, USA

2006 CCRTS

"The State of the Art and the State of the Practice"

June 20-22, 2006

Intelligent Systems Technology Incorporated

3250 Ocean Park Blvd., Suite 100, Santa Monica, CA 90405
310-581-5440 Fax: 310-581-5430 www.IntelSysTech.com

Copyright © 2006 Intelligent Systems Technology, Inc.

Intelligent Systems Technology Incorporated

Outline

- System-of-Systems (SoS) Acquisition
- Need for a Unified Ontology
- Towards an Acquisition & Systems Engineering Ontology
- Hypotheses and Experimental Findings
- Model-Driven Ontologies
- C2 Reference Model and its Uses
- Conclusions

Copyright © 2006 Intelligent Systems Technology, Inc.

Information in this document is the property of Intelligent Systems Technology, Inc. Disclosure is made in confidence.
Unless otherwise permitted, use or further disclosure of the depicted information by persons outside Intelligent Systems Technology, Inc. is prohibited.

System-of-Systems (SoS)

- SoSs in the military tend to be large-scale, netcentric, mix of heterogeneous, multi-agency subsystems comprising:
  - human-in-the-loop subsystems
  - unmanned, autonomous components
  - intelligent agents
- Examples of SoSs in the Army are:
  - Army Battle Command System (ABCS) of the Current Force
  - Future Combat System (FCS) of the Future Force
  - Battle Command SoS
  - C4ISR&TA federation of netcentric systems

Copyright © 2006 Intelligent Systems Technology, Inc.

Information in this document is the property of Intelligent Systems Technology, Inc. Disclosure is made in confidence.
Unless otherwise permitted, use or further disclosure of the depicted information by persons outside Intelligent Systems Technology, Inc. is prohibited.

The SoS Acquisition Problem

- The acquisition of a SoS is an ongoing process in which at any point in time:
  - there is a "**current force**" that the acquisition enterprise is engaged in improving
  - there is ongoing concurrent development of the next generation "**future force**"
- The integration and acquisition of a SoS is a complex, ad-hoc process that frequently results in schedule and cost over-runs

Need a unifying construct to systematize, guide, and accelerate system integration and acquisition

Copyright © 2006 Intelligent Systems Technology, Inc.
Information in this document is the property of Intelligent Systems Technology, Inc. Disclosure is made in confidence.
Unless otherwise permitted, use or further disclosure of the depicted information by persons outside Intelligent Systems Technology, Inc. is prohibited.

Intelligent Systems Technology Incorporated

Ontology as a Unifying Construct

- In its simplest form, an ontology comprises two key primitives that can be represented as a graph:
  - Concept -- a node in the graph characterizing a particular concept in a domain
  - Relationship -- a labeled arc between nodes
- A dictionary comprising these primitives (i.e. concepts, relationships) is an essential part of an ontology
- To be most useful, it needs to provide both an *information model* and a *reference model* to express and represent complex information constructs and application products
- The *information model* encompasses an information architecture, associated axioms, and rules for semantic interoperability based on a *data model*
- The *reference model* provides a structural framework to describe the modules and interfaces of a system in a consistent fashion
- This *data model* includes a taxonomy and associated markup language or metadata tags for data elements, along with allowable data values

ISO/IEC 11179 provides a convenient baseline for specifying and standardizing data elements

Copyright © 2006 Intelligent Systems Technology, Inc.

Information in this document is the property of Intelligent Systems Technology, Inc. Disclosure is made in confidence.
Unless otherwise permitted, use or further disclosure of the depicted information by persons outside Intelligent Systems Technology, Inc. is prohibited.

Unified Ontology

- A representation of both the physical and informational aspects of a system and their relationships
- Rationale
  - acquisition and engineering communities tend to emphasize physical aspects but ignore informational aspects of a system
  - e.g., of the 26 views that DoDAF specifies to describe a system, only one view, OV-7, is devoted to the system logical model
  - also, DoDAF does not offer an overarching information model to uniformly apply to C4ISR&TA applications
  - DoDAF refers to CADM, but does not provide a reference model for using CADM to represent DoDAF views
- A unified ontology includes:
  - an overarching, generic Battle Command (BC) information model (IM) expressed by markup languages (XML*) represented in XML, and whose instances could be validated using the XML schema
  - a corresponding reference model (RM) such as C2RM to represent the contents of DoDAF views and Model-Driven Architecture (MDA) views represented in UML* (MOF, UML, SysML)

Unified Ontology = {IM (XML*) + RM (UML*)}

Copyright © 2006 Intelligent Systems Technology, Inc.

Information in this document is the property of Intelligent Systems Technology, Inc. Disclosure is made in confidence.
Unless otherwise permitted, use or further disclosure of the depicted information by persons outside Intelligent Systems Technology, Inc. is prohibited.

Towards an A&SE* Ontology

- Much written, but no formal ontology exists for acquisition or systems engineering
- Ontology Generation Hypotheses:
  - *analysis of keywords* from relevant documents in each domain can provide insights for developing ontologies
  - *proximity of the domains* can be assessed by analyzing the frequency of occurrence and the extent of similarity of keywords
  - *feasibility of sharing a common upper ontology layer* can be assessed by analyzing the relative frequency of the overlapping concepts

*A&SE: Acquisition and Systems Engineering

Copyright © 2006 Intelligent Systems Technology, Inc.

Information in this document is the property of Intelligent Systems Technology, Inc. Disclosure is made in confidence.
Unless otherwise permitted, use or further disclosure of the depicted information by persons outside Intelligent Systems Technology, Inc. is prohibited.

Experiment/Analyses

- DoD Manager's guide to Technology Transition in an Evolutionary Acquisition Environment used as source document (instance) for characterizing the *acquisition* domain
- IEEE Standard for Application and Management of the Systems Engineering Process used as source document (instance) for the *systems engineering* domain
- Approximately 20 most frequently used domain-oriented terms were selected independently from each document
- Duplicate terms were removed from each list to create a common list
- Frequency of occurrence of these terms (i.e., keywords) in each document was extracted
- Findings:
  - the two domains have much in common and stand to benefit from a shared, common ontology

This type of analysis can be applied to other domains in the acquisition process (e.g. DoDAF operational and technical views)

Copyright © 2006 Intelligent Systems Technology, Inc.
Information in this document is the property of Intelligent Systems Technology, Inc. Disclosure is made in confidence.
Unless otherwise permitted, use or further disclosure of the depicted information by persons outside Intelligent Systems Technology, Inc. is prohibited.

Keyword Occurrences and Rank

(DoD Manager's Guide [15] and IEEE 1220 [16])

RANK [15]	RANK [16]	KEYWORD	OCCURS [15]	OCCURS [16]
1	16	Techn(ology)	1679	214
2	1	System	631	886
3	10	Develop(ment)	500	212
4	25	Acqui(sition)	426	2
5	2	Require(ment)	372	451
6	14	Financ(ial)/Cost	314	96
7	24	Government	299	4
8	26	Research	235	2
9	15	Inform(ation)	232	58
10	4	Product	227	378
11	22	Industry	192	5
12	8	Process	187	270
13	13	Test	125	123
14	3	Design	87	382
15	11	Data	84	140
16	27	Science	84	0

Copyright © 2006 Intelligent Systems Technology, Inc.

Information in this document is the property of Intelligent Systems Technology, Inc. Disclosure is made in confidence.
Unless otherwise permitted, use or further disclosure of the depicted information by persons outside Intelligent Systems Technology, Inc. is prohibited.

Acquisition Enterprise (AE)

- The broadest definition of acquisition includes all activities from "cradle-to-grave" that are needed to develop, deploy, operate, maintain, replace, and dispose of a SoS
- AE encompasses all organizations responsible for the acquisition of a SoS
  - a complex entity comprising cooperating and competing communities of interest (COIs), stakeholders, advocates, and proponents
  - can be characterized along two dimensions: institutional affiliation and people
- SoS can be viewed as an enterprise within the AE
  - SoS problem domain is a sub-domain of the AE problem domain
- Therefore, a comprehensive ontology for the acquisition domain should apply to the SoS domain
- A C4ISR&TA SoS is so complex that the acquisition cycle needs to be applied iteratively ("spirals")

AE can exploit an ontology-driven, SoS lifecycle support environment to make the SoS acquisition problem more tractable and manageable

Copyright © 2006 Intelligent Systems Technology, Inc.
Information in this document is the property of Intelligent Systems Technology, Inc. Disclosure is made in confidence.
Unless otherwise permitted, use or further disclosure of the depicted information by persons outside Intelligent Systems Technology, Inc. is prohibited.

Model-Driven Ontologies

- Analogous to the Meta Object Facility, which provides a higher level of abstraction to derive UML, a reference model is needed to systematically derive domain ontologies
- Domain ontologies derived from a reference model are defined as Model Driven Ontologies (MDO)
- Such Model-Driven Ontologies (MDO) can facilitate the generation of Model-Driven Architectures (MDAs)
- A unified MDO is envisioned as a foundation for:
  - deriving and reusing similar patterns and leveraging and reusing structural and behavioral paradigms…
  - …across concept, design, and implementation languages and across diverse domains corresponding to the subsystems of the SoS

This MDO-based approach from MDA development is potentially invaluable to achieving SoS acquisition affordability and longevity objectives

Copyright © 2006 Intelligent Systems Technology, Inc.

Information in this document is the property of Intelligent Systems Technology, Inc. Disclosure is made in confidence.
Unless otherwise permitted, use or further disclosure of the depicted information by persons outside Intelligent Systems Technology, Inc. is prohibited.

Leveraging IEEE 1220

- Semi-formal framework for describing Systems Engineering Process (SEP) for information systems that comprise humans, hardware, and software
- Since an "Information System" comprises "information" and is a "system", an Information Engineering Process (IEP) needs to be established that:
  - cross-references the SEP
  - along with the SEP, defines a single Unified Engineering Process (UEP)
- The UEP could provide the basis for defining a unified ontology that subsumes both IEP and SEP artifacts

A unified ontology is envisioned as the foundation for designing, integrating, managing, and extending SoS

Copyright © 2006 Intelligent Systems Technology, Inc.
Information in this document is the property of Intelligent Systems Technology, Inc. Disclosure is made in confidence.
Unless otherwise permitted, use or further disclosure of the depicted information by persons outside Intelligent Systems Technology, Inc. is prohibited.

Reference Models (RMs)

- Are not new – but experiencing a major resurgence
- Began to emerge in the 1980's following the success of ISO OSI seven-layer RM (for developing communication systems)
- Another well-known RM is the DoD 4-layer Technical RM (TRM)
- Open Distributed Processing Reference Model (ODP-RM) describes systems that support heterogeneous distributed processing within and between organizations through the use of a common interaction model (application portability across heterogeneous platforms) – includes 5 viewpoints that span 26 DoDAF views

None of these RMs contribute to understanding of C4ISR such as combat, combat support, and combat service support

Copyright © 2006 Intelligent Systems Technology, Inc.

Information in this document is the property of Intelligent Systems Technology, Inc. Disclosure is made in confidence.
Unless otherwise permitted, use or further disclosure of the depicted information by persons outside Intelligent Systems Technology, Inc. is prohibited.

C2 Reference Model (C2RM)

- Is a multidimensional RM– supports technology, systems, operational views
- Is organized around 4 key dimensions: Organization, Technology, Product, and User
- Leverages and extends ISO OSI RM (communications only) to include interactions inherent in Battle Command Systems that are stacked on top of primitives such as *moving*, *shooting*, *seeing*, and *communicating*
- Is a nested enterprise model that can represent both the acquisition enterprise as well as the SoS and subordinate systems in a reusable way
- Is represented to various degrees in UML/XML
- Is compatible with ODP-RM and DoD TRM
- Can potentially support DoDAF views using standard semantics (with some additional effort)

Copyright © 2006 Intelligent Systems Technology, Inc.

Information in this document is the property of Intelligent Systems Technology, Inc. Disclosure is made in confidence.
Unless otherwise permitted, use or further disclosure of the depicted information by persons outside Intelligent Systems Technology, Inc. is prohibited.

C2RM: Key Dimensions

- *Organization*: manage, supervise, execute (processes/plans)
- *Technology*: collect, store, process, present, disseminate (products)
- *Product*: data, information, knowledge, and experience
- *User*: synchronize, educate, collaborate, operate (in mission space)

Copyright © 2006 Intelligent Systems Technology, Inc.

Information in this document is the property of Intelligent Systems Technology, Inc. Disclosure is made in confidence.
Unless otherwise permitted, use or further disclosure of the depicted information by persons outside Intelligent Systems Technology, Inc. is prohibited.

Example C2RM View
(Enterprise/Unit Domain)

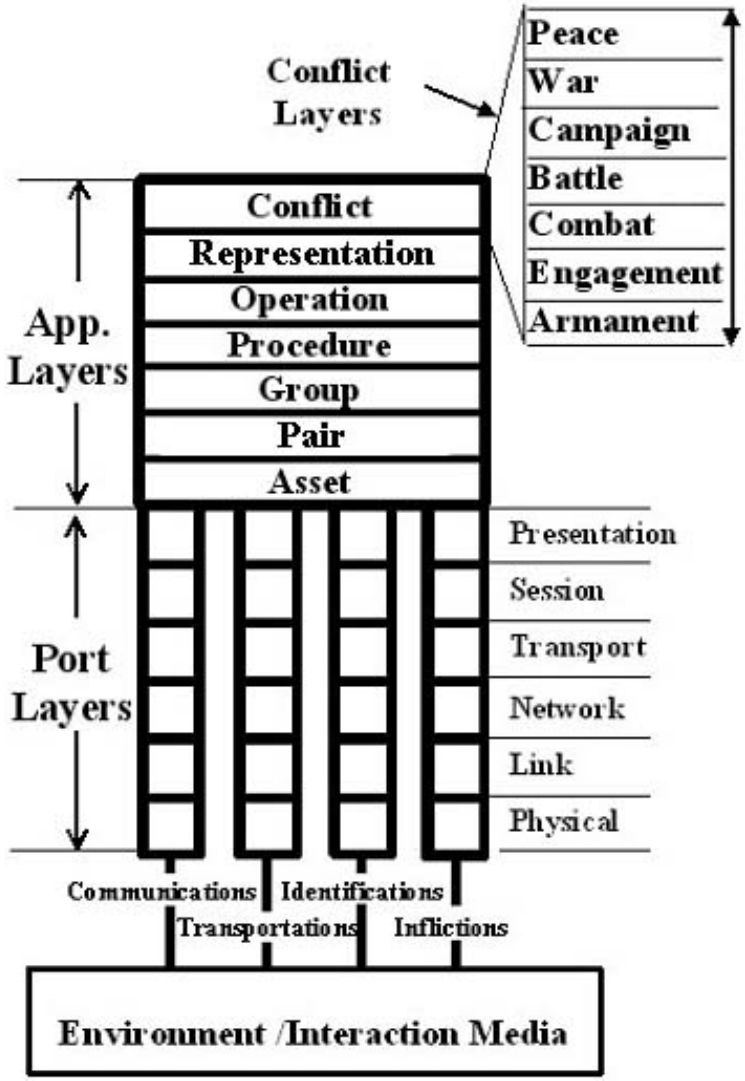

Copyright © 2006 Intelligent Systems Technology, Inc.

Information in this document is the property of Intelligent Systems Technology, Inc. Disclosure is made in confidence.
Unless otherwise permitted, use or further disclosure of the depicted information by persons outside Intelligent Systems Technology, Inc. is prohibited.

UML Information Model

(C2RM-derived)

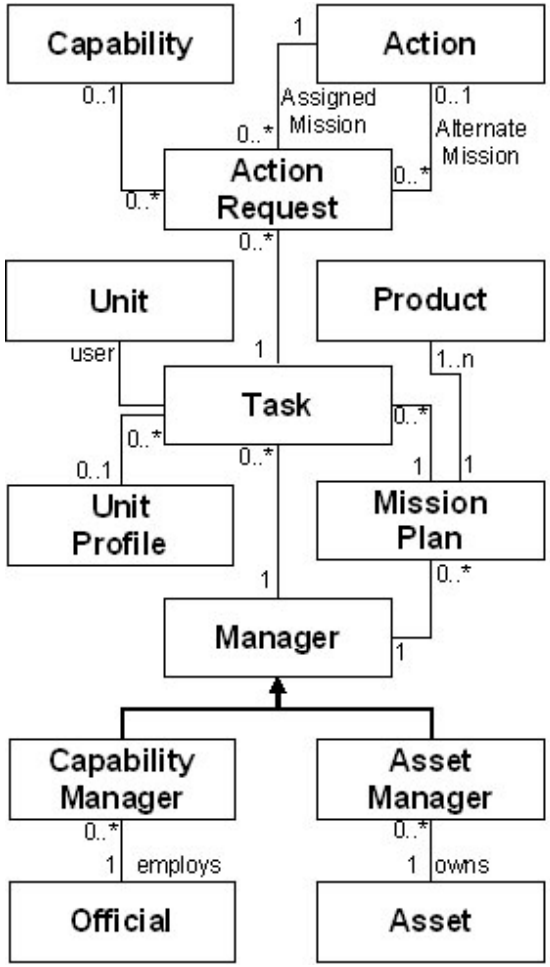

Copyright © 2006 Intelligent Systems Technology, Inc.

Information in this document is the property of Intelligent Systems Technology, Inc. Disclosure is made in confidence.
Unless otherwise permitted, use or further disclosure of the depicted information by persons outside Intelligent Systems Technology, Inc. is prohibited.

XML Schema Fragment for Unit
(C2RM-derived)

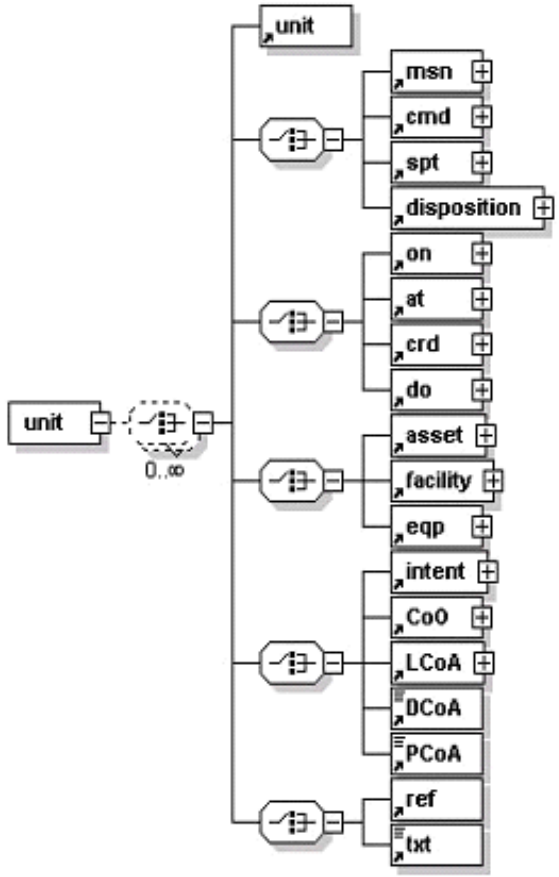

Copyright © 2006 Intelligent Systems Technology, Inc.

Information in this document is the property of Intelligent Systems Technology, Inc. Disclosure is made in confidence.
Unless otherwise permitted, use or further disclosure of the depicted information by persons outside Intelligent Systems Technology, Inc. is prohibited.

Unified SoS Ontology Uses

- Developing systems and integrating SoS
- Synchronizing and managing the development of a joint warfighting capability
- Assessing the needs for improving current systems and maturing technologies
- Proactively synchronizing future requirements and justifying new systems

Copyright © 2006 Intelligent Systems Technology, Inc.

Information in this document is the property of Intelligent Systems Technology, Inc. Disclosure is made in confidence.
Unless otherwise permitted, use or further disclosure of the depicted information by persons outside Intelligent Systems Technology, Inc. is prohibited.

Conclusions

- Acquistion and Systems Engineering domains share common concepts and stand to benefit from a unified ontology
- An Enterprise Reference model is needed to derive and unify domain ontologies
- C2 Reference Model can represent both the acquisition enterprise as well as the SoS and its subordinate systems
- UML Information Model and XML Schema for various concepts in the ontology can be derived from C2RM

SoS ontologies can help systematize and accelerate SoS acquisition

Copyright © 2006 Intelligent Systems Technology, Inc.

Information in this document is the property of Intelligent Systems Technology, Inc. Disclosure is made in confidence.
Unless otherwise permitted, use or further disclosure of the depicted information by persons outside Intelligent Systems Technology, Inc. is prohibited.

Thank you for your kind attention.

Intelligent Systems
Technology Incorporated