2006 CCRTS
THE STATE OF THE ART AND THE STATE OF THE PRACTICE

# Scenario Generation to Support Mission Planning

C2 Modeling and Simulation
C2 Analysis
C2 Concepts and Organizations

Authors:
Duane Gilmour
Lee Krause
Lynn Lehman
Bill McKeever
Tony Stirtzinger

POC: Duane Gilmour
Organization: Air Force Research Laboratory
Address: Air Force Research Laboratory, IFTC
525 Brooks Road
Rome, NY 13441-4505
Phone: 315-330-3550
Fax: 315-330-2953
**Duane.Gilmour@rl.af.mil**

# Scenario Generation to Support Mission Planning

Duane A. Gilmour*, William E. McKeever*, Lee S. Krause**
Tony Stirtzinger**, Lynn A. Lehman**
duane.gilmour@rl.af.mil, william.mckeever@rl.af.mil, lkrause@securboration.com,
tstirtzinger@securboration.com, llehman@securboration.com

*Air Force Research Laboratory, Information Directorate
Advanced Computing Technology Branch
525 Brooks Road, Rome, NY 13441-4505

** Securboration
695 Sanderling Drive
Indialantic, FL 32903

## Abstract

The transition of effect based operations (EBO), dynamic planning and predictive battlespace awareness (PBA) to the operational environment is resulting in a major shift in the mission planning paradigm. The changes facing mission planners are coupled with a changing adversarial environment. As a result, the mission planning domain is required to support both traditional doctrine based opponents as well as emerging asymmetric adversaries. Mission planners currently utilize whiteboards and documented results in spreadsheets and presentations to support decision making with limited automated tool support. New analysis capabilities must be developed for mission planners to leverage emerging mission planning concepts. This paper will explore EBO scenario generation techniques that can aid the mission planning domain by streamlining the mission planning cycle. Key concepts to be addressed include: (1) utilizing EBO scenario management and generation to direct multiple simulation runs; (2) leveraging simulations to support PBA; (3) maximizing utilization of existing and future tools to support the decision process and (4) providing analysts with actionable information. This paper will highlight a proof of concept demonstration, along with an operational use study.

**Keywords:** Effects Based Operations (EBO), Predictive Battlespace Awareness (PBA), Scenario Generation, Simulation, Mission Planning

## 1 Introduction

The speed in which military operations are carried out has changed dramatically in recent years and adversaries no longer limit themselves to doctrine based approaches to warfare. Adversaries, pursuing asymmetric approaches to warfare, are emerging at an ever increasing rate. The adversary of the future will continue to become more challenging. Consequently, mission planners must be able to prepare for a broad range of adversaries; from traditional large uniformed militaries to small local militia groups, agile non-state and non-military actors. Also, Warfighters are expected to conduct pre- through post conflict operations in a much broader

range of environments, including traditional, urban, cyber and space. At the same time, war fighter capabilities are becoming more advanced and operations are transitioning from traditional attrition to more effects based approaches. This has created new challenges for mission planning and increased the need for a more dynamic planning capability which leverages modeling and simulation.

## 2 Background

The military planning process depends upon analysis systems to be able to anticipate and respond in real-time to a dynamically changing battlespace with counteractions. Complex technical challenges exist in developing automated processes to derive hypotheses about future alternatives for mission scenarios. The military conducts combat operations in the presence of uncertainty and the alternatives that might emerge. It is virtually impossible to identify or predict the specific details of what might transpire. As a result, the planning process is continuously being updated/modified to account for the latest adversary actions. The end result is a reactionary planning system which is oftentimes being driven by the latest adversary action(s). This, in turn, leads to potential situations that put the war fighter in constant danger.

The premise of PBA is to be able to anticipate the evolution of the battlespace in order to pre-empt, influence, and decisively defeat the adversary. PBA would lead to more proactive decisions and resultant actions, ultimately moving the adversary towards the desired end state. Anticipation would provide decision makers with the ability to foresee the battlespace resulting in optimized decisions based on resources, constraints, and time available. The ability to influence or shape the battlespace would mean that decision makers would know which actions, and the appropriate times and places to perform them, to achieve the desired effects on the adversary. Combined, the ability to anticipate and shape would enable a capability to get inside the adversary's decision loop and generate plans that ultimately lead to dominance in the battlespace. This would enable a savings in manpower and resources as potentially dangerous situations could be avoided through either anticipation thereof or shaping operations.

One of the challenges of developing planning systems that support PBA is the ability to rapidly produce and analyze courses of action (COAs). COAs are generated and evaluated to determine the necessary steps to meet the overall strategic objectives. COA analysis is the process of performing "what if" analysis of actions and reactions and is designed to visualize the flow of the battle and evaluate each friendly COA. Due to the dynamic nature of military campaigns, COAs must be continuously generated, developed and analyzed prior to execution. However, common approaches to this process are archaic.

The current COA development process is predominantly manual, and it takes hours, if not days to fully develop a limited number of COAs. Once developed, these COAs must be analyzed dynamically to attempt to capture the action/reaction/counteraction nature of conflict. The current COA analysis process is extremely manpower intensive and is generally accomplished utilizing teams that represent the friendly and adversary forces. As a result, a limited number of COAs are fully developed and dynamically analyzed. In addition, these approaches to COA development and analysis cannot be maintained at the speed of current operations and thus are typically utilized well in advance of operations. Automated COA analysis techniques, which

have been developed, are currently performed utilizing a scripted adversary. This pre-scripting fails to account for the dynamic nature of conflict. In addition, automated techniques focus on attrition based modeling, whereas modern effects based strategies employ a mixture of kinetic and non-kinetic operations and utilize a combination of direct, indirect, complex, cumulative, and cascading effects.

The authors have been researching and developing technologies to perform effects based COA analysis which account for a dynamic adversary [1, 2]. Our approach is to utilize high performance computing (HPC) technology to dynamically execute multiple simulations concurrently and faster than real-time to evaluate COAs for critical elements related to execution and timing as well as overall effectiveness against a range of adversarial COAs. The use of HPC technology and simulation will enable dynamic COA analysis prior to as well as during engagement for dynamic situation assessment and prediction, resulting in more effective and timely planning and decision making. One of the challenges to performing multiple parallel COA analysis is the capability to rapidly and dynamically produce multiple input files, or scenarios.

A scenario describes the configuration parameters for running a specific simulation. These parameters specify the initial positions and quantities of assets; command structure; center of gravity model, which is essential for effects-based approaches; and the detailed missions to be exercised during each simulation run. These parameters must be supplied for friendly, coalition, and hostile forces. Scenario parameters are read from configuration files when the simulation begins. Sources of this information for scenarios vary, and can include proprietary database structures, mission plans, environmental constraints, and analysis reports. Current techniques for scenario generation are extremely labor intensive, often requiring manual adjustments to data from numerous sources to support increasingly complex simulations. This laborious and error prone process presents a significant impediment to rapidly assessing multiple COAs to support a continuous dynamic planning approach. A capability is required to be able to generate and assess tens or even hundreds of complete COA scenarios in a matter of minutes or hours. Clearly, automated approaches for rapid scenario generation are necessary to enable this critically needed capability.

To begin to address these challenges, the authors from Securboration performed research and developed a capability that semi-automates EBO scenario management and generation techniques that can be utilized to direct multiple simulation runs. The technical challenge and approach was to develop a robust data model which ties mission planning tools and disparate data sources directly to the simulation environments to rapidly produce multiple simulation level COAs. This robust data model is in the form of a flexible effects based ontology that defines the data needed for scenario generation as well as the relationships between these data. The remainder of the paper will highlight the development of the scenario generation (SGen) capability along with a proof of concept demonstration and an operational use study.

## 3 The Changing Planning Paradigm and SGen

The mission planning process was developed with a doctrine based adversary as a central concept. The analyst understood the capabilities of the adversary and their fighting strategy. With proper training the analyst was able to perform a qualitative analysis of the potential COA and develop appropriate recommendations. Changes in the tempo of war, effects based planning, and the emergence of asymmetric adversaries has created an environment that limits analysts understanding of the adversary. This makes meaningful qualitative analysis difficult, if not impossible. To support this shift in the mission planning paradigm, analysts need new techniques to provide quantitative data that can be used to compare a wide range of outcomes during the COA selection process. One promising technique is the simulation of multiple COAs against a dynamic adversary to provide a quantitative comparison, aiding analysts in determination of the best COA.

With the current mission planning process the selection of COA alternatives is a qualitative exercise with little simulation support. Correction of this problem will require two additional capabilities; the ability to automatically create scenarios based on planning artifacts and the ability to incorporate simulation of an emergent adversary to highlight the strengths and weaknesses of alternate COAs. The ability to compare a wide range of actions becomes critical to the success of the mission. The emerging paradigm shift in mission planning has placed new demands on the use of simulation technology to support evaluation of alternative war plans, effects based operations and response to asymmetric adversary threats. SGen technology plays a key role in supporting this shift of simulation focus from data centricity to scenario centricity. Current data centric approaches are primarily manual, focusing on specific simulations and their data requirements. This current “stovepipe” architecture is shown in Figure 1. The scenario centric approach focuses on scenarios that drive the simulation. SGen technology supports development of scenarios that can be run on a range of simulations. Pre-mission simulations to evaluate COAs, considering EBO and PBA, require simulation for evaluation of alternative COAs to provide commanders with the necessary insight to evaluate tactics and strategy. SGen provides the necessary automated support to generate alternative simulation scenarios without the current extensive manual activities. SGen is capable of generating numerous simulation scenarios (and variations of them) and running them in parallel to evaluate alternative war plans. The new approach supported by SGen provides analysts and commanders with the actionable information required to develop effects based war plans. Understanding the political, cultural, economic, etc. effects of a military action will require multiple models/simulations for a single military COA. Predictive battlespace awareness (PBA) can be viewed as a rolling horizon of information that provides the analyst with information on how the current battlespace is different than the plan/simulation and what actions (new COAs) are required, if any, to meet the mission objectives. SGen provides the necessary level of automation to rapidly assemble scenario adjustments and evaluate new COAs to support PBA.

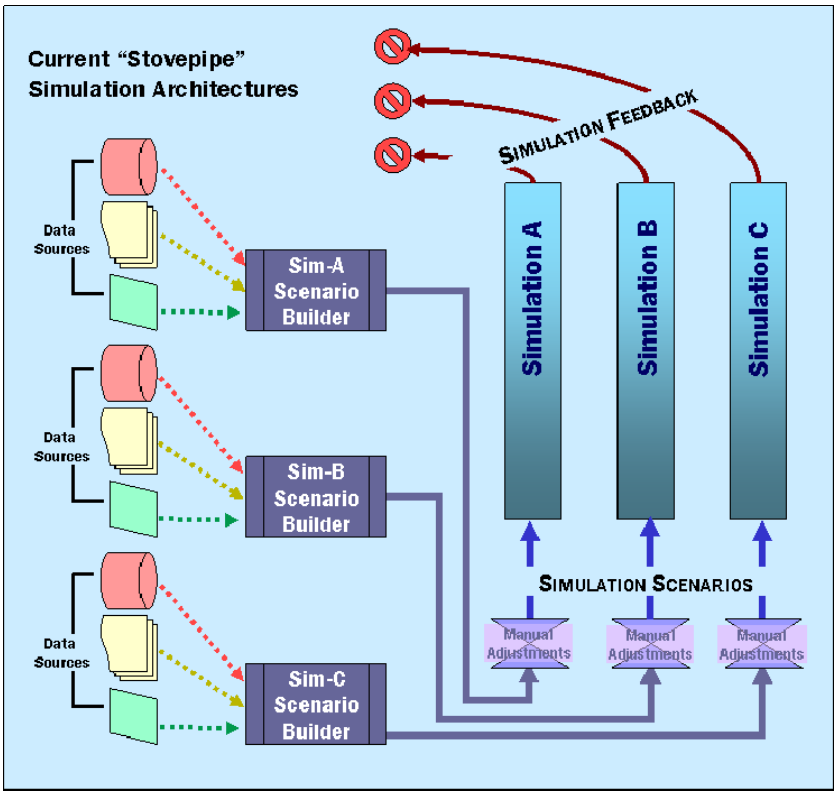


**Figure 1 Stovepipe Simulation Architectures**

## 4 SGen Overview

Securboration Inc. developed the EBO SGen toolset as an innovative approach to the automated creation of complete scenarios for mission planning simulation. This approach refined how scenario generation technology can be directly applied to problems facing the EBO, PBA, mission planning and simulation domains. Current techniques for scenario generation are extremely labor intensive, often requiring manual adjustments to data from numerous sources, to support increasingly complex simulations. Due to time constraints, this process often prevents the simulation of large numbers of data sets, eliminating the desired or necessary level of "what–if" analysis. The effectiveness of new and emerging mission planning approaches, such as EBO require the rapid development of simulation inputs and the exercise of multiple simulation runs. Existing approaches tie each simulation tool to a proprietary scenario representation. This "stovepipe" architecture prevents a single scenario from running directly on multiple simulation tools. Additionally, adjustments to simulation inputs often require cumbersome manual procedures rendering the exercise of alternate simulation runs even more unlikely. The EBO-scenario generation toolset breaks the current stovepipe architecture with a robust ontological data model tying mission-planning tools and data resources directly to the Open Course of Action (COA) Analysis Framework. As shown in Figure 2, the Open COA Analysis Framework supports multiple target simulations from the SGen Ontology.

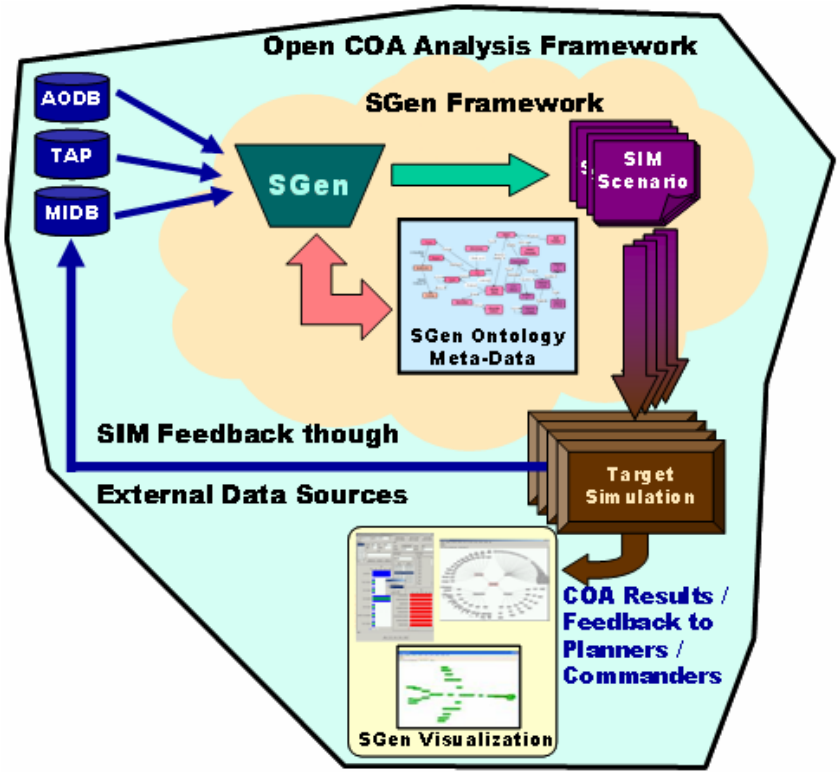


**Figure 2 High-level view of the EBO-Scenario Generation toolset**

## 5 Why SGen and the Role of HLA, MSDL, BML

SGen provides automated support for the rapid generation of friendly and enemy COAs to support the mission planning community. SGen enables simulation across the entire Political, Military, Economic, Social, Infrastructure and Informational (PMESII) spectrum supporting EBO. The High Level Architecture (HLA) was developed to provide a readily available modeling and simulation environment for use by DoD components. The Military Scenario Definition Language (MSDL) standardizes the description of military scenarios. The Battle Management Language (BML) was developed to enhance the interoperability of command and control (C2) systems.

> HLA is a general purpose architecture for simulation reuse and interoperability, developed under the leadership of the Defense Modeling and Simulation Office (DMSO.) Its objective is to support reuse and interoperability across the large numbers of different simulations developed and maintained by the DoD. [4]
>
> BML is the unambiguous language used to: 1) command and control forces and equipment conducting military operations and 2) provide for situational awareness and a shared, common operational picture. It can be seen as a representation of a digitized commander's intent to be used for real troops, for simulated troops, and for future robotic forces. [5]

> MSDL is being developed to provide simulations with a mechanism for loading military scenarios. As a standard, MSDL is not being developed for simulation alone. The intent is for MSDL to define military scenarios that are independent of the application of that scenario. To that end, MSDL is an XML based data interchange format that enables C2 planning applications to interchange the military portions of scenarios with simulations and other applications.[6]

SGen will extend the capabilities of HLA, MSDL and BML to meet the current and future needs of the mission planning and simulation community. For commands utilizing HLA, SGen can become a scenario broker to feed scenario updates to the HLA RTI. As MSDL matures, SGen can take advantage of the standard format to support a wide range of military simulations, while continuing to support the remaining PMESII components. The integration of BML with SGen will allow processing of information from C2 tools describing the state of the battlespace. Receiving information about the state of the battlespace is a critical component of the PBA process. SGen will leverage this information while developing the next set of potential COAs as part of the PBA process.

## 6 The Science of SGen

SGen is built around the concept of data integration and analysis through the use of 1) ontological formalization, 2) reasoning and 3) inference capabilities. While most integration and analysis frameworks rely on a model-based approach, or a rule-based approach, SGen uses an ontological-based approach. An ontology-based approach allows for the creation of a meta-model that formally (i.e. supports semantic definitions) represents a domain of interest (e.g. mission planning). This meta-model includes definitions for mapping to domain specific data sources (e.g. Modernized Integrated Database (MIDB), Air Operations Database (AODB) and the strategy development tool (SDT)) and definitions for analysis rules (e.g. RuleML). Formalizing the meta-model definition also provides a convenient mechanism for sharing and reusing other ontologies (or models) that have been proven to be effective for a particular area of interest. The specific ontology implementation used for SGen is the Web Ontology Language (OWL). A core set of services are implemented within SGen to insulate the business logic (e.g. scenario allocator) from a specific ontology implementation so that other implementations (e.g. Protégé Knowledge Base) can be used. These services interact through ontology application programming interfaces (APIs) (e.g. Jena and Protégé). Building SGen in this manner allows it to leverage compatible plug-and-play capabilities of the chosen ontology implementations to perform the functions of declaration, reasoning and inferencing. Figure 3 shows the architectural components comprising SGen.

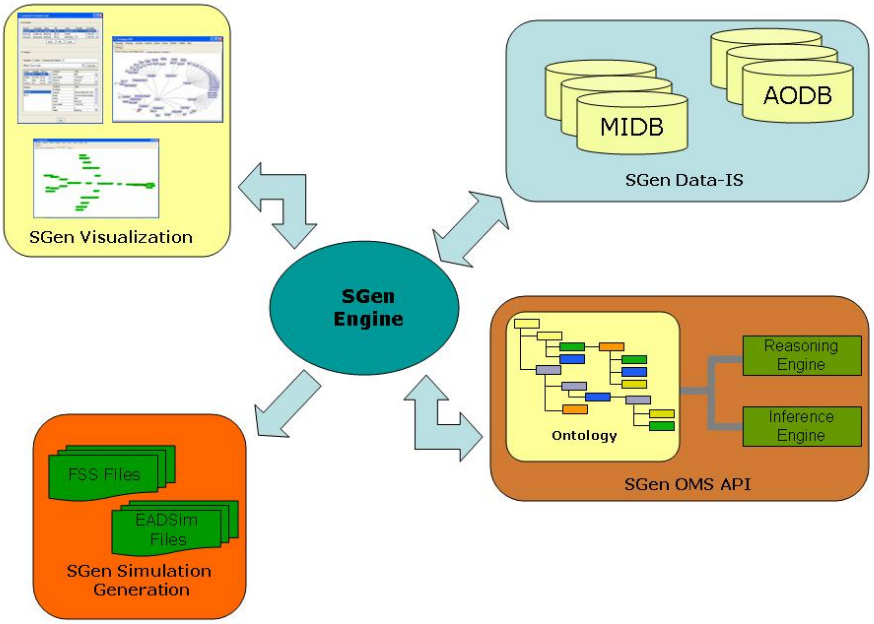


**Figure 3 SGen Components**

## 7 SGen proof of concept

During the second phase of SGen development, an expanded proof-of-concept prototype was constructed. The prototype was developed using a spiral development methodology and served as a platform for the demonstration of important concepts and technical approaches used in the SGen framework. A block diagram of the SGen demonstration platform is shown in Figure 4. Securboration demonstrated the ability of the SGen tool to support "what-if" analysis and create multiple scenarios for simulation. The initial EBO scenario generation user interface is used to support the creation, modification and deletion of scenarios/initial Air Tasking Orders (ATOs).

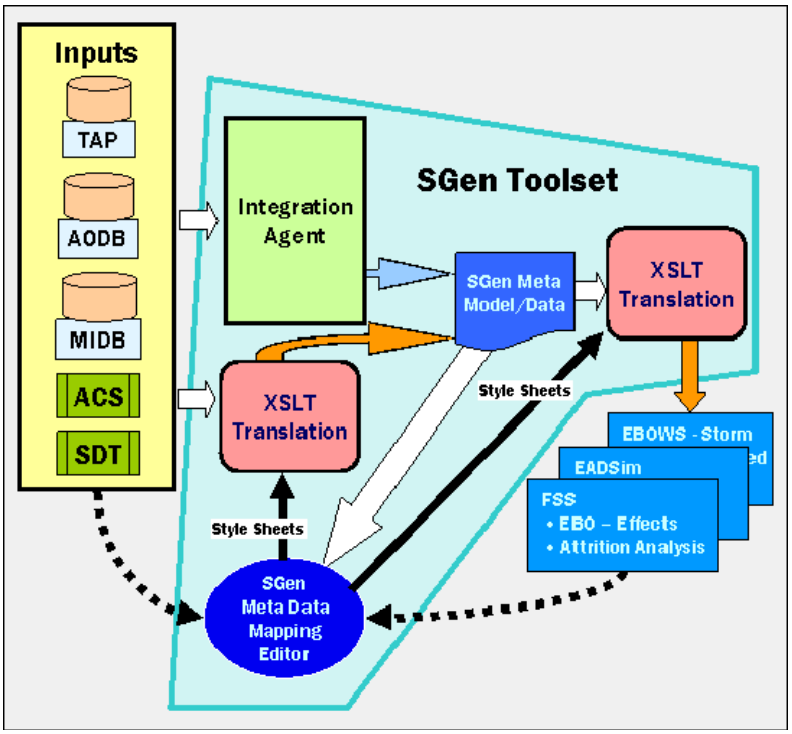


**Figure 4 EBO SGen Proof of Concept**

The proof-of-concept platform demonstrated the following capabilities:

- User has the ability to import a variety of battlespace information
- Information is organized in the context of scenarios, missions, COAs and ATOs
- User is allowed to modify and manipulate the scenario data
- Simulation files are created from the scenario data to execute and analyze the results

The EBO SGen demonstration platform validated the SGen approach. SGen technology is an integral part of support for the changing mission planning paradigm and will support the successful transition to new planning techniques.

## 8 Conclusion

The research and development effort associated with EBO scenario generation has demonstrated two distinct and important results: (1) the use of scenario generation technology can extend the useable life of existing stovepipe simulation technologies allowing those technologies continued use as mission planning strategies and methodologies change and (2) that new and emerging planning methods, such as EBO, see significant benefit and utility from the SGen approach. One of the important goals of the SGen research was to prove that a transition from data-centered scenario development to scenario-centered development was possible. Current scenario management and scenario creation methods have proven woefully inadequate in the face of new, alternative strategies in the mission planning domain. The demands of newer approaches require significant levels of "what-if" analysis and the evaluation and simulation of alternate wartime strategies. Current scenario development techniques coupled with existing stovepipe simulation

technologies have proven to be limited and cumbersome when significant numbers of simulation runs are required to support, analyze and evaluate alternative plans. This problem grows exponentially when multiple stovepipe simulations are required to evaluate similar data and support the development of multiple alternative COAs. SGen provides a significantly improved alternative. By breaking the scenario to simulation link and replacing it with a scenario to data link, single scenarios can be run on multiple tools. The support for changing or tweaking scenarios to support "what-if" analysis is also significantly improved with those changes now being isolated to a single point instead of across multiple simulations. SGen supports newer, larger scope simulations developed to support new planning methodologies. By isolating scenario changes at the data level, the scenario-to-simulation link is broken, making the analysis of alternative war plans much more efficient, automating the extensive simulation and scenario management requirements of the newer planning approaches.

SGen technology has significantly advanced the state of technology in the development of scenario generation. It has shown that single scenario data sets can be used to support multiple simulation tools, scenario data sets can be efficiently modified to support additional burdens of new planning approaches and that it can preserve the significant investment in current and emerging simulation technologies.

## 9 Acknowledgements

This material is based in part on research sponsored by the Air Force Research Laboratory under contract number F30602-03-C-0082. The U.S. Government is authorized to reproduce and distribute reprints for Government purposes notwithstanding any copyright notation thereon.

## 10 References

[1] Gilmour, Hanna, McKeever, Walter, "Real-Time Course of Action Analysis", 10th International Command and Control Research and Technology Symposium: The Future of C2, McLean VA, June 2005.

[2] Lehman, Krause, Gilmour, Santos, "Intent Driven Adversarial Modeling", 10th International Command and Control Research and Technology Symposium: The Future of C2, McLean VA, June 2005.

[3] Koziarz, Krause, Lehman, "Automated Scenario Generation," SPIE 17th Annual International Symposium on AeroSense Enabling Technologies for Simulation Science, Cambridge, MA, April 21-25, 2003

[4] https://www.dmso.mil/public/transition/hla/

[5] Hieb, Tolk, Sudnikovich, Pullen "Developing Extensible Battle Management Language to Enable Coalition Interoperability" **http://www.vmasc.odu.edu/publications/Tolk/04E-SIW-064.pdf**

[6] What is Military Scenario Definition Language http://list.onesaf.org/html/modules.php?name=FAQ&myfaq=yes&id_cat=3&categories=OneSAF+Frequently+Asked+Questions#20