Land Tactical Headquarters & Unit CIS Collaborative Research Programme

Andrew H Smith*
Defence Evaluation & Research Agency
Fort Halstead,
Sevenoaks,
Kent, TN14 7BP.
England.
(44) 1959 514416
ahsmith@dera.gov.uk

Abstract

The paper describes the new UK Land Tactical HQ (LTHQ) and Unit Command Information Systems (CIS) Collaborative Research Programme which started in June 1999 under the UK MoD Applied Research Programme 19e (ARP 19e) for Land Tactical CIS. The project aim and objectives are directly related to the Symposium theme of "Making Information Superiority Happen". As the project is only at an early stage, it is too early to be offering results. The purpose of the paper is to make the project known to a wider audience within the international CIS research community so as to establish links with related projects and obtain feedback on the proposed approach and research activities.

1. Introduction

1.1 *Background*

It is generally recognised that good shared situational awareness within and between levels of command coupled with accurate and timely planning and dissemination of orders are fundamental to the effective prosecution of operations at all levels. The digitization programme is intended to provide the new technologies, structures, processes and staff training necessary to achieve this.

Much of the UK CIS research work to-date has been focused on the Brigade (Bde) and Division (Div) (i.e. formation) levels of command. This has involved many untested and loosely expressed assumptions about future systems at Battlegroup (BG) level and below (i.e. unit and sub-unit). In particular, the point of data entry, data ownership, data replication and utilisation of the limited communications resources all need urgent attention. The Command, Control, Communications, Computers, Intelligence, Surveillance, and Reconnaissance (C4ISR) activities at the unit and sub-unit levels are key components in the overall digitized military force. This is the level at which military operations are actually prosecuted on the ground. The overall effective exploitation of

digitization relies strongly upon carefully designed digitization systems and methods of working at these levels of command.

The headquarters (HQ) and platform Command and Control (C2) needs at unit and sub-unit level and the benefits that could accrue from digitization need to be examined, in particular in the context of the on-going formation level applications research.

This situation was recognised by the Digitization of the Battlespace (Land) Special Project Team (DBL SPT) in the ARP 19e Strategy Paper for 1999 - 2010 [1]. It identified the stages of DBL as: stage 1 (DS1) between 1999 & 2002, stage 2 (DS2) between 2002 & 2008; and stage 3 (DS3) between 2008 & 2018. In particular the paper said "ARP 19e is to support the development of core C2 capability through a coherent systems approach to the analysis of C2 processes within a field headquarters" and also "ARP 19e is to play a part in advising Doctrine staff on the impact of technology on doctrine". The customer requirements and considerations such as the focus on BG level and below are reflected in the Research Requirements and Proposals for Financial Year 1999 onwards and constitute the requirement for this new collaborative research programme.

1.2 ***Aim of the Research Programme***

The collaborative research programme aim is "to determine the extent to which the functioning of deployed land tactical HQs will benefit most effectively from digitization".

1.3 ***Research Objectives***

The programme has the following objectives:

- **Understand the command process:** Analyse and benchmark the current command processes within a deployed BG HQ and propose options for process re-engineering based on civil experiences, where appropriate;
- **Understand the environment:** Generate a common understanding of the key C2 issues so as to identify the nature and scope of the requirements in the platform to BG environment;
- **Improve processes at BG level:** Identify and demonstrate tools to automate routine tasks and to assist with complex tasks so as to reduce workload and improve the functioning of a tactical HQ in the field (including the impact of improved sensors and communications capability);
- **Assess suitability of emerging technology:** Identify trends and new technologies for interacting with a CIS, including speech recognition, large electronic displays and synthetic environments, and propose options for demonstrating equipment based on such technologies that will survive the demanding environment of a deployed tactical HQ, especially at BG level and below;
- **Support Operational Assessment (OA) studies:** Obtain performance data for potential future systems options under a range of operating conditions to underpin OA

studies. The combination of technology assessments and manned exercises using early prototype equipments in novel configurations offers a valuable opportunity the equipment procurement processes.

2. Research Approach

2.1 *Overall Strategy*

Since the Battlegroup Information and Control Systems Technical Demonstrator Programme (BICS TDP) circa 1994, very little command research has been conducted in Unit level CIS. It is therefore recommended that a “classical” experimental methodology should be employed based upon observation and testing of improvement hypotheses. Figure 1 illustrates a structured 'model-test-model' type approach that links the ‘real’ world, laboratory and modelled environments.

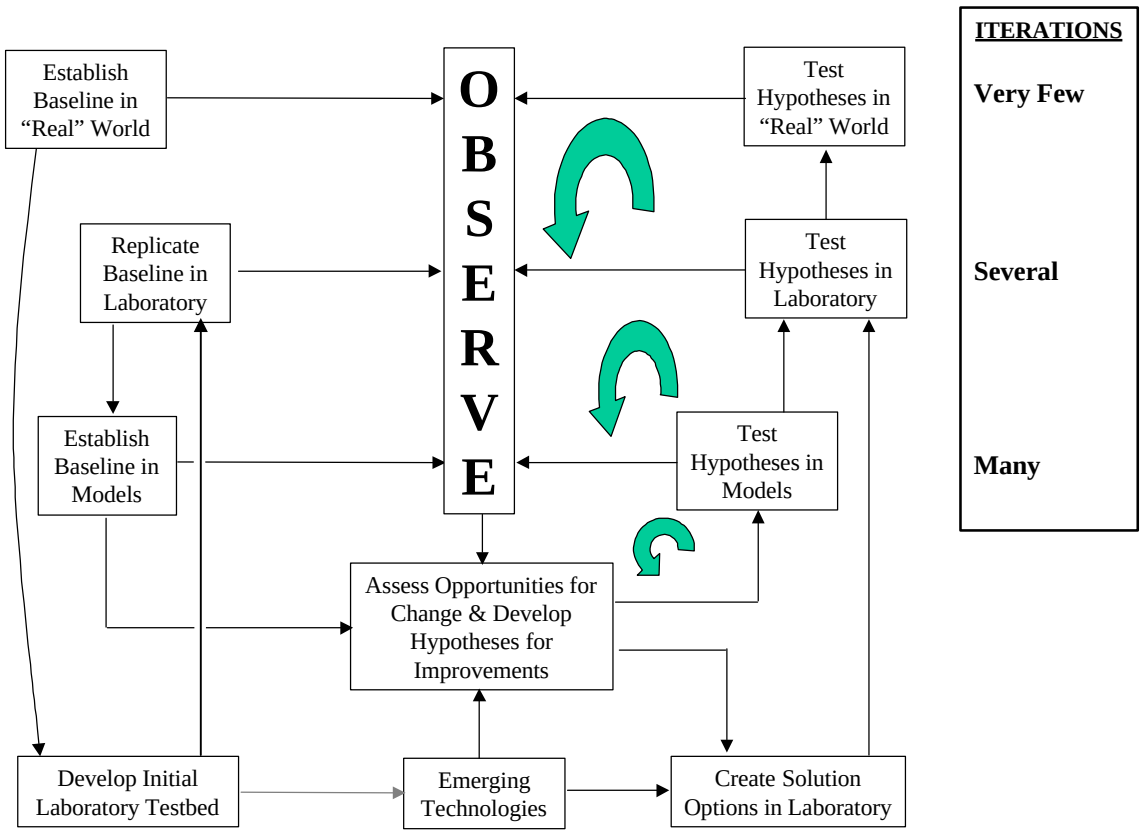

Figure 1. A Structured ‘Model-Test-Model’ Type Approach

The key to this approach is the establishment of a sound baseline in each environment and achieving coherence across the environments. Observation of the baseline will identify frequently encountered capability gaps and permit initial questions and improvement hypotheses to be developed. Continuing observation of the effects of the postulated improvements will permit the hypotheses to be refined iteratively.

The research approach therefore requires the following components:

- Analysis of a baseline and enhanced case in a ‘real’ world environment (probably one iteration of each at the British Army Training Unit Suffield (BATUS));
- Analysis of a virtual baseline and a number (several) of enhanced cases in a laboratory environment;
- Analysis of a baseline and a large number of potential enhanced cases in a modelling environment.

2.2 *Types of Change to the System*

In general terms the types of change we can expect to make to military C4ISR systems can be categorised under the headings of: organisation, process, staffing and technology. The types of change that will be considered under this research programme are identified in figure 2:

Organisation	Staffing
• Command structure; • C2 staff functions and roles (within and between staff cells); • Deployments on the ground (between HQs etc); • Command space architectures (within HQs); • Communications networks (logical & physical); • IS architecture (inc integration and inter-operability levels).	• Skills requirements; • Training (Procedures & CIS, individual & collective); • Attitude (e.g. confidence in the CIS).
Process	**Technology**
• C2 processes; • Team/group working (linked to staff function / roles); • Staff tasks; • Methods of working; • Concepts of use (mgt of information, systems, comms).	• Communications (voice and data); • Information storage and retrieval; • Information processing; • Information display; • Human-computer interaction; • Systems performance.

Figure 2. Potential Types of Change to the Systems

This approach would permit the many ‘what if’ iterations of potential changes to be addressed in models before testing in laboratory and ultimately in real world environments. Once the baseline OoPoSoTo is established in each environment (where OoPoSoTo are the baselines for organisation, process, staffing and technology respectively), the iterations could be as follows:

$$O_0P_0S_0T_1 \rightarrow O_0P_1S_0T_1 \rightarrow O_0P_2S_0T_1 \rightarrow O_0P_2S_0T_2 \rightarrow O_0P_3S_0T_2 \text{ etc.}$$

where cases of O , P , S and T are either single or groups of potential improvements identified in the hypotheses. In other words, the first iteration ($O_0P_0S_0T_1$) is the improved technology case with no organisation, process or staffing changes (akin to the simplest DS2 Initial Operating Capability (IOC)).

In practice these factors are inter-dependent such that changes to one are likely to result in consequential, but possibly unpredictable, changes in others. For example $O_0P_0S_0T_1$ is likely to reveal consequential changes to process (or at least the underlying methods of working). There is little to be gained by forcing the system into artificial states; far better to allow it to achieve a stable state of 'equilibrium'. The approach adopted will, therefore, involve a combination of controlling some factors while allowing relaxation in others, but observing the consequential changes.

2.3 ***Research Questions***

An analysis of possible research questions during the scoping study has produced an initial set grouped under five headings as shown below with examples:

- **Understanding the problems:** E.g. what are the current timelines, key decision-points and critical paths associated with the planning and execution phases of 'selected' 'typical' BG and sub-unit operations ?
- **CIS requirements capture:** E.g. how can CIS technology be used to automate routine tasks and assist the user with complex tasks at tactical HQs in the field ?
- **Benefit assessment:** E.g. what reductions in planning times can be achieved by providing basic electronic messaging that enables users to see the same tactical overlays and perform simple calculations upon them ?
- **Concepts of use:** E.g. how will staff perform their tasks differently if presented with an ability to receive, produce and send graphical situation overlays and orders during the planning and execution of operations at BG HQ and sub-unit command posts ?
- **Training implications:** E.g. what are the implications for individual and collective training needs from the introduction of group/team working support tools ?

The research questions are explored in greater detail in the LTHQ & Unit CIS Collaborative Research Programme Scoping Study Document [2] and will be further refined and extended as the programme progresses.

2.4 **Types of mission to be supported**

The customer requirement does not specify the types of mission to be supported thus, by implication, all the types of mission included in the current UK Defence Commitments should be considered. As such a broad scope is well beyond the resources available to this research programme, the customer priorities for the research 'case study' scenarios are taken to be:

- **High Intensity Conflict (HIC):** against a high/medium technology opponent;
- **Peace Keeping Operations (PKO):** against a medium/low technology opponent.

2.5 ***Collaboration***

It is generally recognised that there are many complex, diverse yet equally important aspects to military C4ISR systems. Consequently an integrated mix of military, scientific and technical skills and expertise is necessary in order to properly understand and investigate the opportunities for improvement. This leads naturally to the proposal for a collaborative research programme where projects representing the diversity of system aspects work together towards a common aim and objectives.

The primary research areas to be included are:

- Systems Concepts;
- Unit and Formation HQ Systems;
- Crew and Vehicle Systems;
- Common Infrastructure Services - inc Comms Emulations;
- Information Security (INFOSEC);
- Synthetic Environments (SEs) for Warfighting Experiments;
- Performance Monitoring and Analysis Facilities;
- C4ISR Operational Analysis.

The projects investigating these areas that are wholly, partially or only in-directly involved in the proposed collaborative research programme are shown in figure 3:

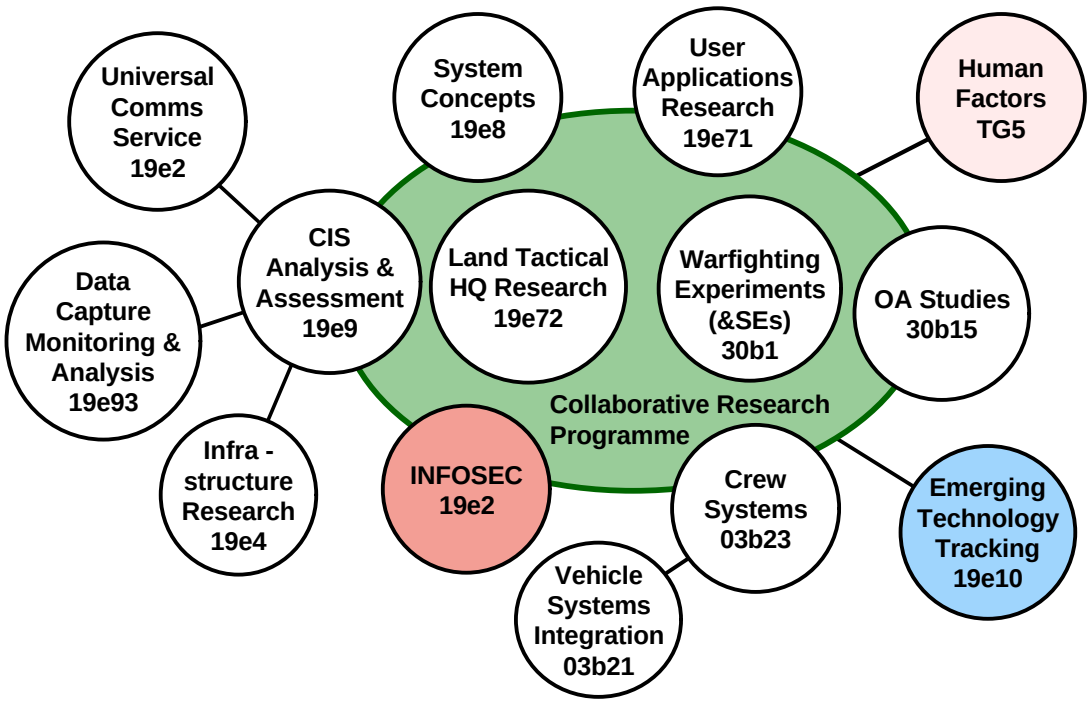

Figure 3. Projects Involved in the Collaborative Research Programme

3. **Research Programme**

3.1 ***Programme Stages***

The proposed programme is divided into four sequential stages as follows:

- **Establish a baseline understanding of the system and examine the impact of limited initial changes:** Establish a baseline or benchmark C4ISR system that represents the current known problems and opportunities for improvement for core elements of a 'typical' mechanised unit. Also examine the impact of limited initial changes to the baseline based upon the introduction of existing prototype CIS tools, especially those likely to exemplify areas of early / high value benefit;
- **Focus on the requirements for an initial operating capability:** A more comprehensive assessment of the requirements for an initial operating capability will be conducted using: the knowledge gained from establishing a benchmark C4ISR system; the findings from introducing limited initial changes; and other research and requirements analysis in the UK, US and elsewhere;
- **Focus on the potential increments of an evolving capability:** Assessments will be conducted on the potential increments of an evolving capability, building on: an assumed initial operating capability; the evolving system concepts; an improved knowledge of the areas where benefits remain to be realised; and an analysis of emerging technologies;
- **Focus on the potential characteristics of an advanced systems capability:** In the longer term, advanced technologies are anticipated whose incremental benefit will be judged against the prevailing integrated systems capability. Speech technology; advanced interactive information displays, powerful knowledge-based information processing tools and virtual C2 environments are among those that should be investigated as they mature into exploitable products.

The stages follow a logical sequence with each stage building on the achievements and recommendations derived from the preceding one.

3.2 ***Timetable***

The proposed timings for the main programme stages are:

- **Stage 1:** Apr 00 to Mar 01:
- **Stage 2:** Apr 01 to Sep 02;
- **Stage 3:** Oct 02 to Mar 04;
- **Stage 4:** From Apr 04.

The nature of the anticipated changes to the MoD ARP from 1 Apr 01 are unclear at present. However, a four year programme has been planned with a break-point at 31 Mar 01.

3.3 *Main Research Activities*

The research strategy must be translated into a research programme which is achieved by mapping the elements of the research strategy onto an outline programme structure as shown in figure 4.

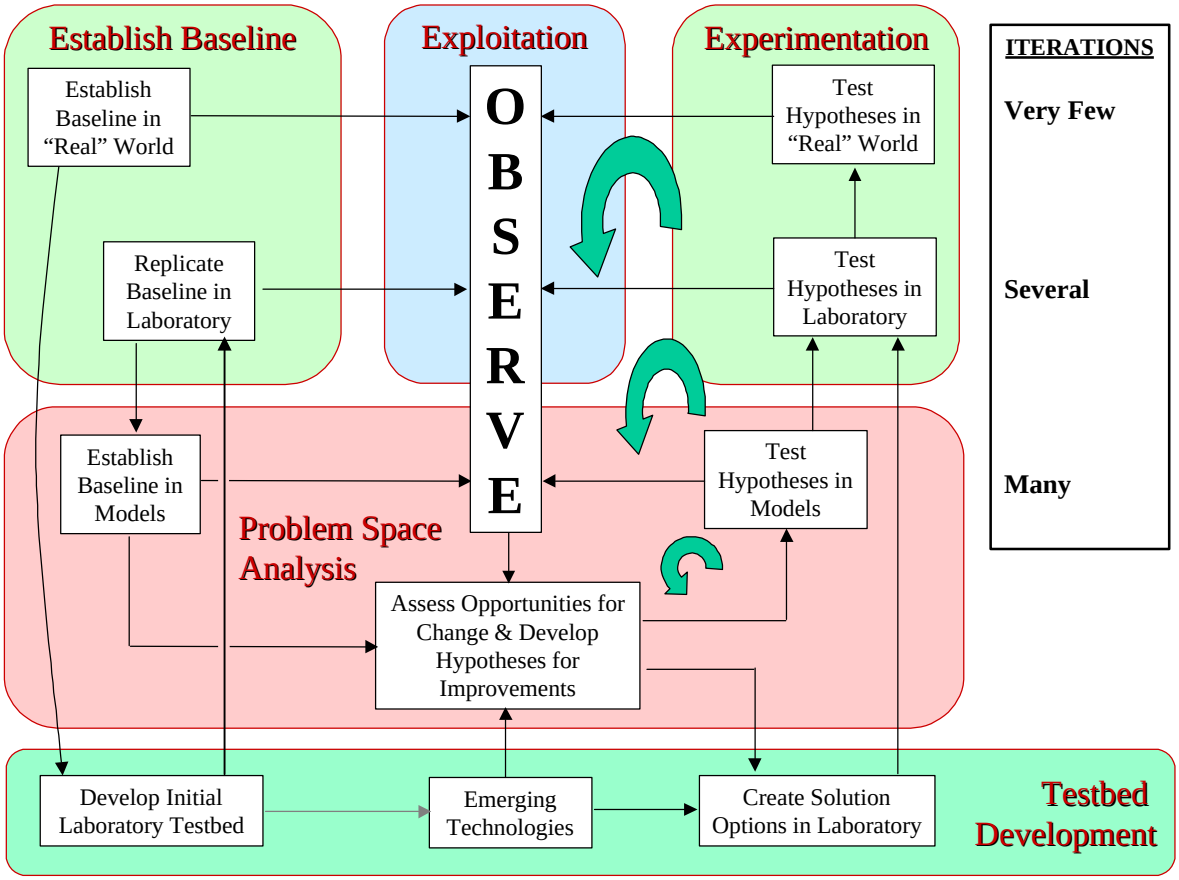

Figure 4. Translation of the research Approach into an Outline Programme

The main research activities that constitute the outline programme structure are described below.

3.1.1 *Establish a Baseline*

This is a special case of experimentation where a baseline or initial benchmark 'definition' of the C4ISR system will be established using a combination of current doctrine and observations of the 'real' world obtained from exercises at BATUS and other Field Training Exercises (FTXs) and Command Post Exercises (CPXs). The observations comprise a comprehensive set of data collected during the exercises and After Action Reviews (AAR) or staff de-briefings. Part of the baseline definition will be an assessment of the current C4ISR capability gaps which will be correlated with the findings of studies such as the BICS TDP to ensure the completeness of the

baseline. The baseline definition will underpin any systems models needed during the Problem Space Analysis tasks. It will also be used to confirm the required attributes of the initial laboratory testbed, already under development.

3.1.2 *Problem Space Analysis*

This activity is to analyse current and future C4ISR capability gaps (problems) and opportunities for change. The work will identify and then analyse the problem areas and opportunities for change. It will draw upon the baseline initially and thereafter on observations from modelling, laboratory and real world studies, as well as existing research and technology watching to establish a series of research questions building upon those developed during the Scoping Study [2]. Correspondingly hypotheses for improvement will be developed in areas such as organisation, processes, staffing and technology, but in particular processes and technology. The hypotheses will be tested using models such as the C2IS Model, SIMBAT and HiLOCA where appropriate to obtain confidence in the likely benefits of the proposed improvements. The use of models enables many iterations of testing so that far more parameter variations and larger sample sizes can be obtained. Where suitable models do not exist, subject matter experts and judgmental analyses will be employed. The analysis will lead, when appropriate, to more comprehensive testing using the laboratory testbed, where the number of iterations of testing will be more limited. The analysis will establish the parameters for the laboratory testbed trials and evaluations. In due course the hypotheses will be tested in the 'real' world where the number of possible iterations of testing will be very few.

3.1.3 *Testbed Development*

A research testbed will be constructed comprising: representations of C4ISR system elements under investigation; a synthetic battlefield environment; and experimental data collection and analysis tools. Figure 5 shows the initial ‘core’ layout of the testbed.

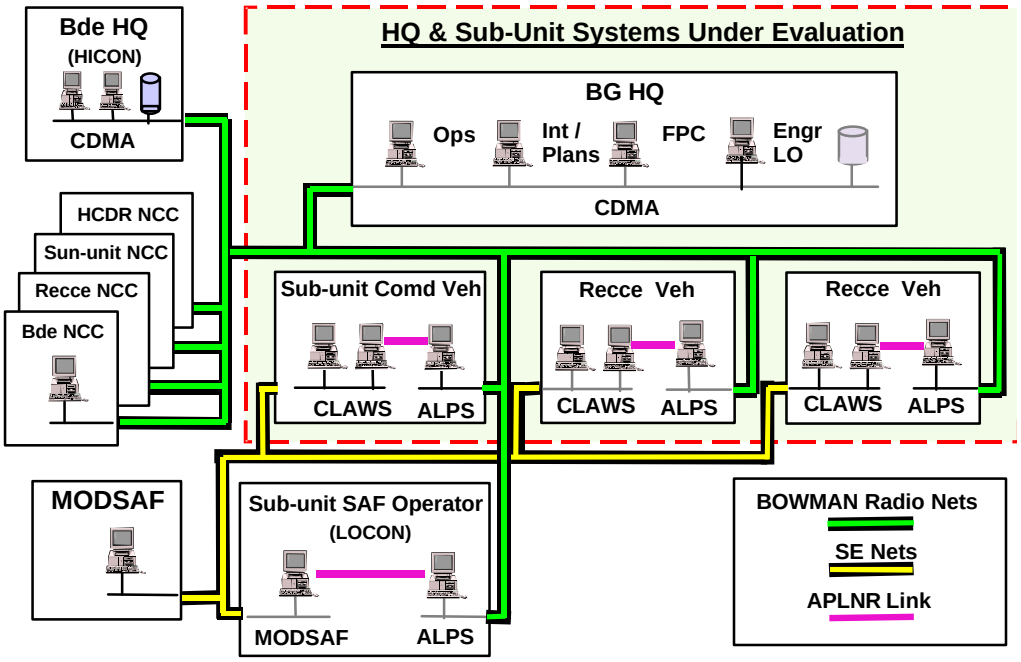

Figure 5. Initial Core Layout of the Testbed

The main components of the initial testbed are:

- Command Decision Making Aids (CDMA) for the HQ staffs;
- Advanced Land Platform Systems (ALPS) for in-vehicle commanders;
- A common infrastructure for battlefield user applications;
- Voice & Data Comms Emulation;
- Collective Low-cost Advanced Warfighting Simulation (CLAWS) for manned AFVs;
- Modular Semi-Automated Forces (MoDSAF) for simulated enemy and friendly forces;
- Data Logging, Monitoring & Analysis.

The testbed design will be an evolving response to advances in the research themes and the current set of research questions. Research themes and questions imply certain capabilities in terms of the experimental situations which can be set up and the observations which can be made. There will also be a continuing agenda of technical issues to be addressed, such as integration of components into the testbed. The testbed will make best use, wherever possible, of the research products from collaborating and other related projects as required for specific experimental objectives. The testbed will be transportable to maximise the prospect of obtaining military participation in the planned manned exercises. It will also be distributed over a number of DERA sites to facilitate cost-effective development by the collaborating projects.

3.1.4 *Experimentation*

Experimentation will be conducted, where appropriate, using the research testbed to provide greater detail about the options for improvement. An experimental programme will be set-up that includes a combination of technical trials and manned exercises with military participants drawn from DERA resources or the Regular Army where appropriate. As experimentation is relatively costly, the experimental objectives shall be clearly identified at the earliest opportunity.

3.1.5 *Research Exploitation*

Although a Programme Management Board is expected to provide the formal conduit for exploitation of the research programme products, there is a need for more direct engagement with specific customers at particular times. Informal working level contacts are expected to constitute the practical and timely exploitation mechanism. Close liaison is anticipated with Director General Doctrine & Development (DGD&D) staffs, user representatives in the BOWMAN & Digitization Military Team (BDMT) and the procurement office under Integrated Project Team (IPT) 132 who are likely to be the main beneficiaries of the research findings. The work will involve a synthesis of experimental results and other research to answer the agreed research questions. The precise format of the products will be agreed on a case by case basis.

3.4 *Products of the Research*

In general the research products will be: presentations; formal reports; exercise/trials reports; technical notes; prototype products (including prototype CIS tools, design documents and concepts of use/methods of working); results data; and capability demonstrations.

The table in figure 6 sets out the proposed products and delivery dates for a four year programme. It should be noted that these are the formal products and there will be many other informal products that will be identified in the detailed work plans.

Principal Products	Dates
Demonstration of initial research testbed.	31 May 00
Report on baseline system, analysis of initial limited changes and recommendations for initial operating capability.	31 Mar 01
Demonstration of prototype facilities for an initial operating capability.	28 Feb 02
Assessment report on a proposed initial operating capability and recommended increments of an evolving capability.	30 Sep 02
Demonstration of prototype initial increments of an evolving operating capability.	30 Apr 03
Demonstration of further prototype increments of an evolving operating capability.	30 Nov 03
Assessment report on the prototype increments of an integrated operating capability and recommended characteristics of an advanced systems capability.	31 Mar 04

Figure 6. Table of Principal Products and Proposed Delivery Dates

Although many of these products should inform the development of Unit level CIS, the scope of the research will cover far more than just equipment characteristics. It will inform: system architectures; concepts of use; information management strategies; levels of service (for tools and infrastructure).

3.5 ***Principal Dependencies***

The principal research programme dependencies identified during the scoping study are described below:

3.5.1 ***Participation by all the collaborating projects***

Although ARP 19e7 (Land Tactical HQ) is providing the major contribution, the programme is reliant upon the contributions from ARP 03b (Armoured Fighting Vehicles), ARP 30b (Land Systems Studies) and the other 19e projects (19e2 (INFOSEC & Comms), 19e4 (Systems Infra-structures), 19e8 (Systems Concepts) & 19e9 (Systems Integration & Assessment)).

3.5.2 ***Information about existing systems in the 'real' world***

Information from BATUS exercises and other FTXs and CPXs attended by the Warfighting Experiments Team is fundamental to establishing a baseline system 'definition' and thus identification of capability gaps and opportunities for improvement in the early stages of the programme.

3.5.3 ***Involvement by end user groups, doctrine staff, the capability manager and DPA***

The involvement of BDMT, DGD&D, DBL SPT and IPT 132 is essential to ensure both proper guidance to the research from a military perspective and effective exploitation, as they will be the principal users of the research.

3.5.4 ***Existing scenarios and digital mapping data***

Existing scenarios will be used from BATUS, the ALPS project and Command And Staff Trainer (South) (CAST(S)) that are mounted over areas where we already hold suitable digital mapping data. This will substantially reduce the risk of programme delay while data is obtained or generated anew as has been experienced on many similar projects.

3.5.5 ***Involvement by real end users***

To ensure that the research findings are consistent with end user needs and expectations it is considered essential that at appropriate times the prototype future system options are evaluated with real end users under representative conditions. Participation of regular army end users is reliant upon the Regular Army Assistance Table (RAAT) and the current nominated unit is the

Combined Army Training Centre (CATC) BG. Building a co-operative relationship with the CATC BG is considered to be very important to the success of the research programme.

3.5.6 *Representative military teams from within DERA*

If it is impossible to obtain regular military staff for some manned exercises using the LTHQ testbed, which is the ideal approach, then representative military teams will be assembled from a combination of DERA military staff and retired staff employed under contract.

3.5.7 *The first manned exercise will be in Nov 00 with a Pilot in Jun/Jul 00*

To gather the information considered necessary to advance the programme, the first manned exercise will be conducted, using either DERA military staff or RAAT (if available) around Nov 00. A pilot trial will be conducted to ensure the testbed systems, procedures and evaluation tools are all operating satisfactorily, around Jun/Jul 00.

4. **Conclusions**

4.1 *Focus and scope of programme*

The customer requirements for the LTHQ research were quite clearly to investigate existing capability gaps and opportunities for improvement in LTHQ at unit level and below. Although the medium and longer term goals are for the research to look ahead to the advanced technologies that might be exploited in DS3, the short to medium term goals are to support the procurement of DS2 in terms of informing the requirements of a core IOC and the capability increments to be achieved through technology insertion evolving from federated towards integrated systems. The work is to be guided by the goal to achieve effective exploitation of digitization, which presumes the introduction of CIS technology. The scope of the work is not, however, limited to technology issues as it is required to also consider changes to the organisation, processes, staffing and the potential impact on doctrine. These requirements have their origins in the 19e Research Strategy Paper [1] and have been restated in successive Research Requirements. The ARP is being changed significantly from FY01 onwards, so although a four year programme is proposed in the scoping study, the emphasis in on FY00 which must deliver exploitable products even if the later stages do not go ahead.

4.2 *Research approach*

A ‘classical’ experimental approach will be employed for this research based upon observation and testing of improvement hypotheses. A structured 'model-test-model' type approach will link analysis and experimentation in the ‘real’ world, laboratory and modelling environments. The key to this approach is the establishment of a sound baseline system ‘definition’ from which existing capability gaps and opportunities for improvement can be identified and analysed. This will enable research questions and improvement hypotheses to be developed and tested firstly as models, then in a laboratory testbed and finally in a ’real' world environment. The research will proceed on an

iterative basis, starting with a baseline system then building upon this by progressively examining different areas where improvement options might exist.

4.3 ***There are many complex, diverse yet equally important aspects to military C4ISR systems***

The many complex, diverse yet equally important aspects to military C4ISR systems demands an integrated mix of military, scientific and technical skills and expertise in order to properly understand and investigate the opportunities for improvement. Consequently the LTHQ research programme will involve significant collaboration between related MoD ARP projects covering the diversity of system aspects and working together towards a common aim and objectives.

4.4 ***Assumptions and constraints***

The fundamental assumptions upon which the research programme has been based are:

- The central role of empirical studies;
- Use of a research testbed with prototype technologies and concepts of use, to investigate hypotheses for improvement;
- The initial use of HIC scenarios;
- Collaboration between related MoD ARP projects;
- The importance of end user involvement.

The main constraints are in the short timetable to support the DS2 procurement and the availability of regular army staff to participate in LTHQ manned exercises. None of these are considered to be show-stoppers for the proposed LTHQ programme.

4.5 ***Exploitation***

The primary exploitation path for this research will be through MoD DBL SPT (the MoD Customer Desk Office for LTHQ) for the IOC requirements and benefits assessment in support of DS2 and thereafter investigations of the options for incremental developments leading to DS3. The latter may well feed into progressive User Applications developments. As a key member of IPT 132, the Defence Procurement Agency (DPA) must be informed by this research, again, in the identification and evaluation of requirements options. DGD&D are seeking lessons from the research on the impact of technology on doctrine and user needs, while BDMT are interested in the short and medium term opportunities for improvement to the current operational capability.

5. **References**

[1] SO1 BIS DDOR(IS), *ARP 19e Land Tactical CIS Strategy Paper for 1999 - 2010*, UK MoD Paper D/DDOR(IS)/314/1, 1998.

[2] A H Smith et al, *Land Tactical HQ & Unit CIS Collaborative Research Programme: Scoping Study Document*, DERA Working Paper DERA/LSB3/WP000193/1.0, 2000.