SOVEREIGN: An Autonomous Neural System for Goal-oriented Mobile Robot Navigation

William P. Gnadt

Lockheed Martin Corporation
MS2 - Syracuse
497 Electronics Parkway
EP-5 MD 58
Syracuse, NY 13221
Telephone: +1 315 456 4460
william.gnadt@lmco.com

LOCKHEED MARTIN

TALK OUTLINE

- Problem statement
- Key Modeling Themes
- Simplified Plus-maze Environment
- Example Movie
- Major Model Components
- Simulation Results
- Summary
- Acknowledgments

PROBLEM STATEMENT

Command and control (C2) systems employ autonomous platforms for such tasks as force protection, surveillance, and search and rescue. The result is a growing need for adaptive control systems to focus data collection efforts, and reduce operator workloads, while addressing navigational demands. The SOVEREIGN (Self-Organizing, Vision, Expectation, Recognition, Emotion, Intelligent, Goal oriented Navigation) neural model embodies these capabilities, and is tested in a simplified 3D virtual reality environment.

KEY MODELING THEMES

1. **Biologically-inspired design**
2. **Transition from reactive to planned movement**

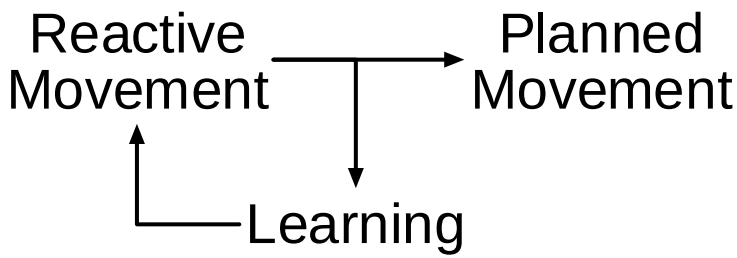

3. **Parallel What and Where processing streams** **(Goodale and Milner, 1992, Mishkin et al., 1983, Ungerleider and Mishkin, 1982)**
4. **Homologous navigational and arm movements** **(Bullock et. al., 1993)**

SIMPLIFIED PLUS-MAZE ENVIRONMENT

- **The plus-maze can be used to study many aspects of goal-oriented spatial behavior (Munn, 1950)**
- **Four arms connected by a single choice point**
- **Proximal cues are visual landmarks**
- **Restrictions necessitate a route-based navigation strategy (O'Keefe and Nadel, 1978)**

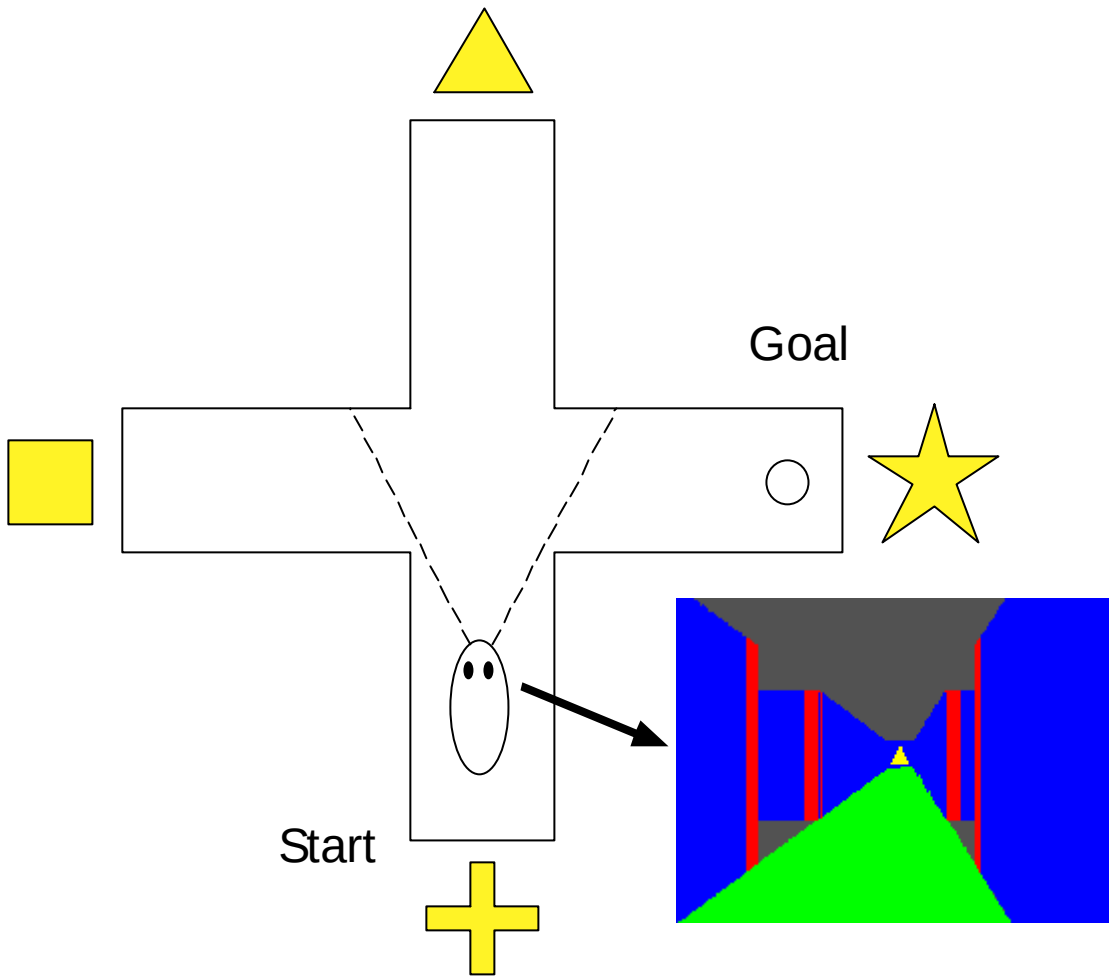

VISUALLY-GUIDED REACTIVE BEHAVIOR

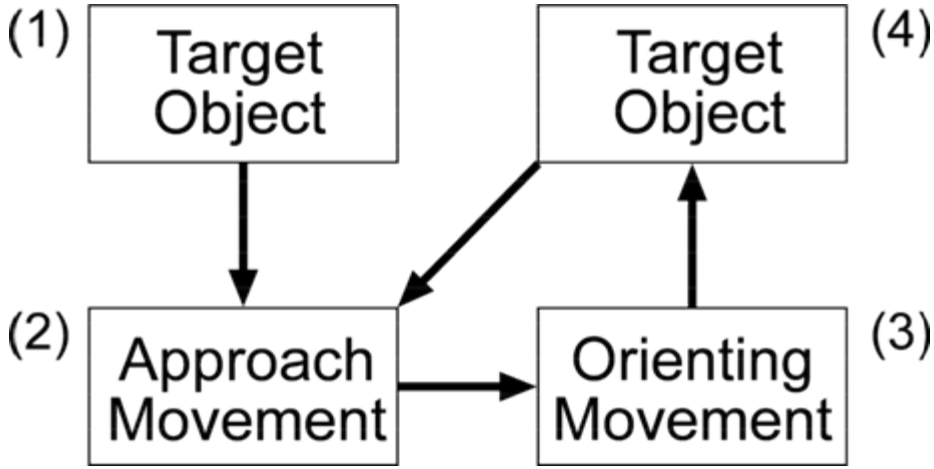

1. Learn to categorize target object and compute its position relative to the body.
2. Compute a reactive approach movement toward the target object.
3. Orient away from the target object after attending to a peripheral motion cue.
4. Go to step 2.

Basis for (Approach,Orient) motor commands ...

EXAMPLE MOVIE

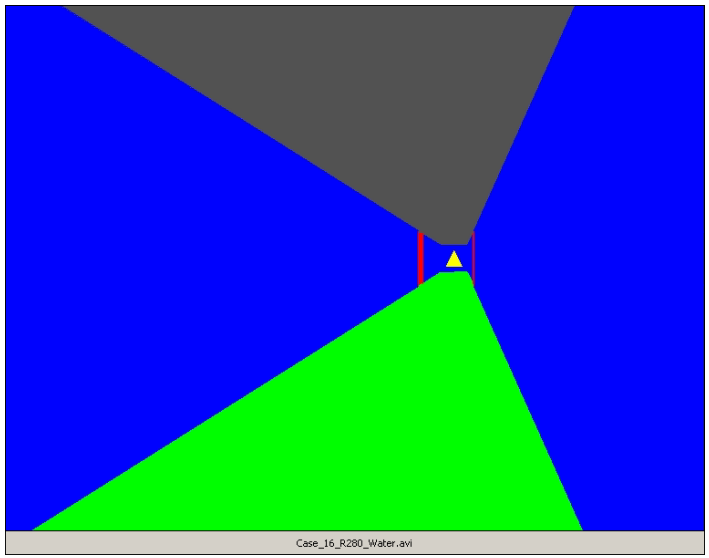

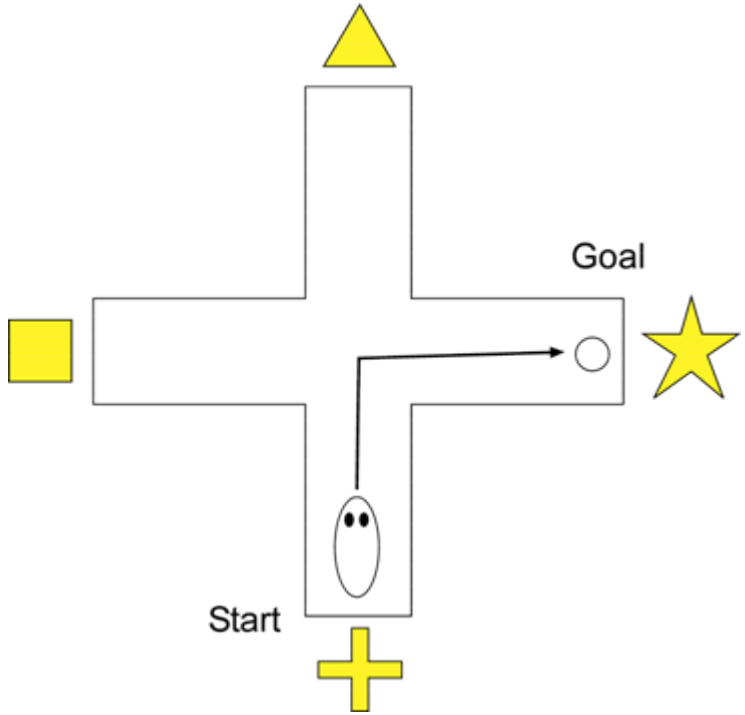

Move Forward-Right-Forward to reach the goal location.

MAJOR MODEL COMPONENTS

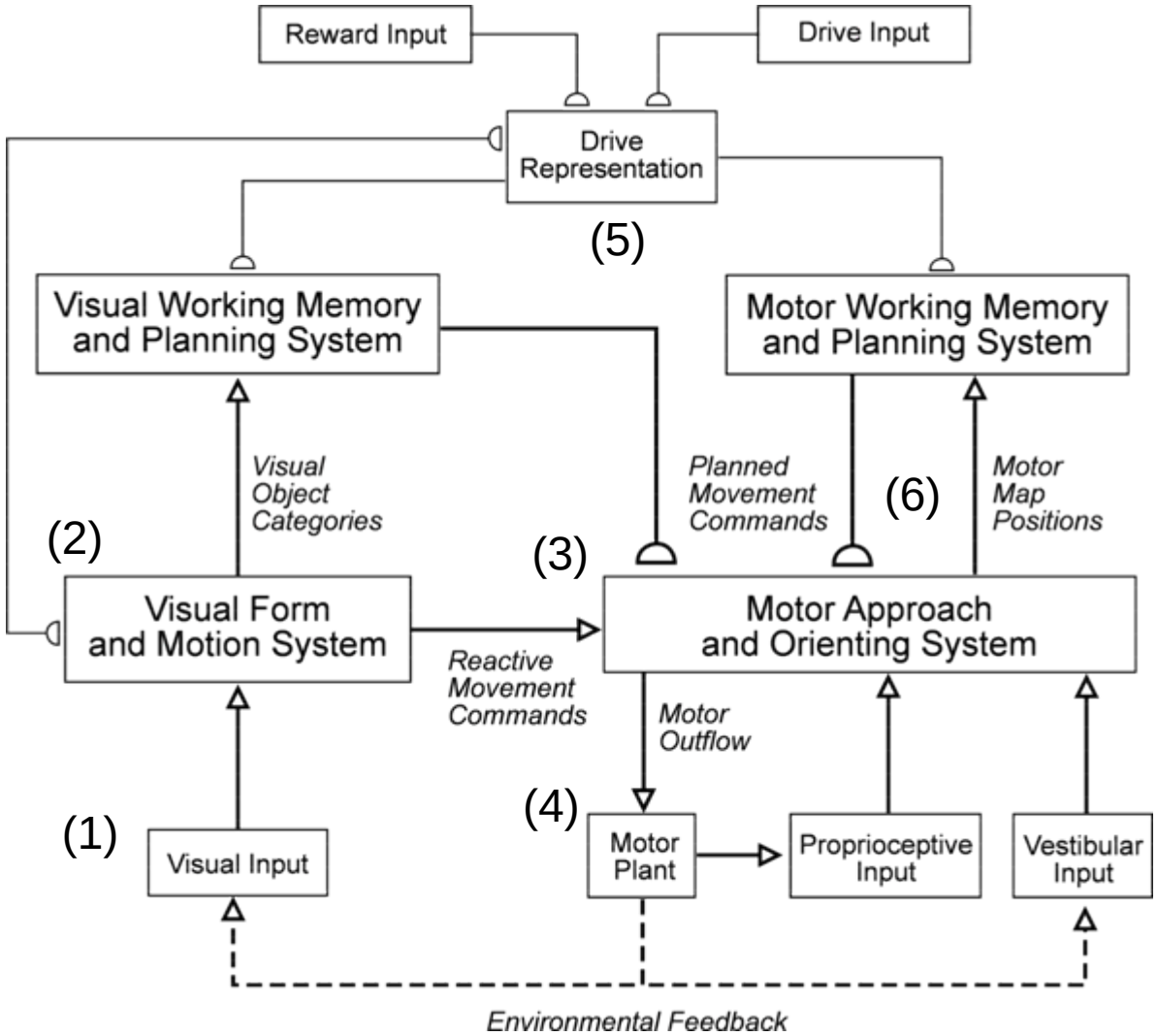

Model components are defined in detail mathematically…

VISUAL FORM AND MOTION SYSTEM

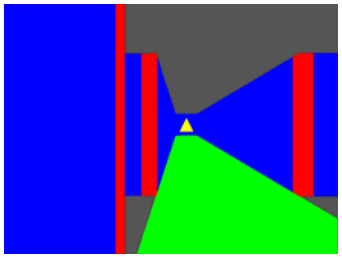

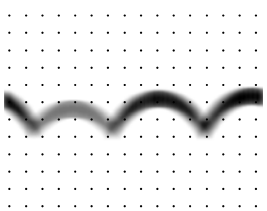

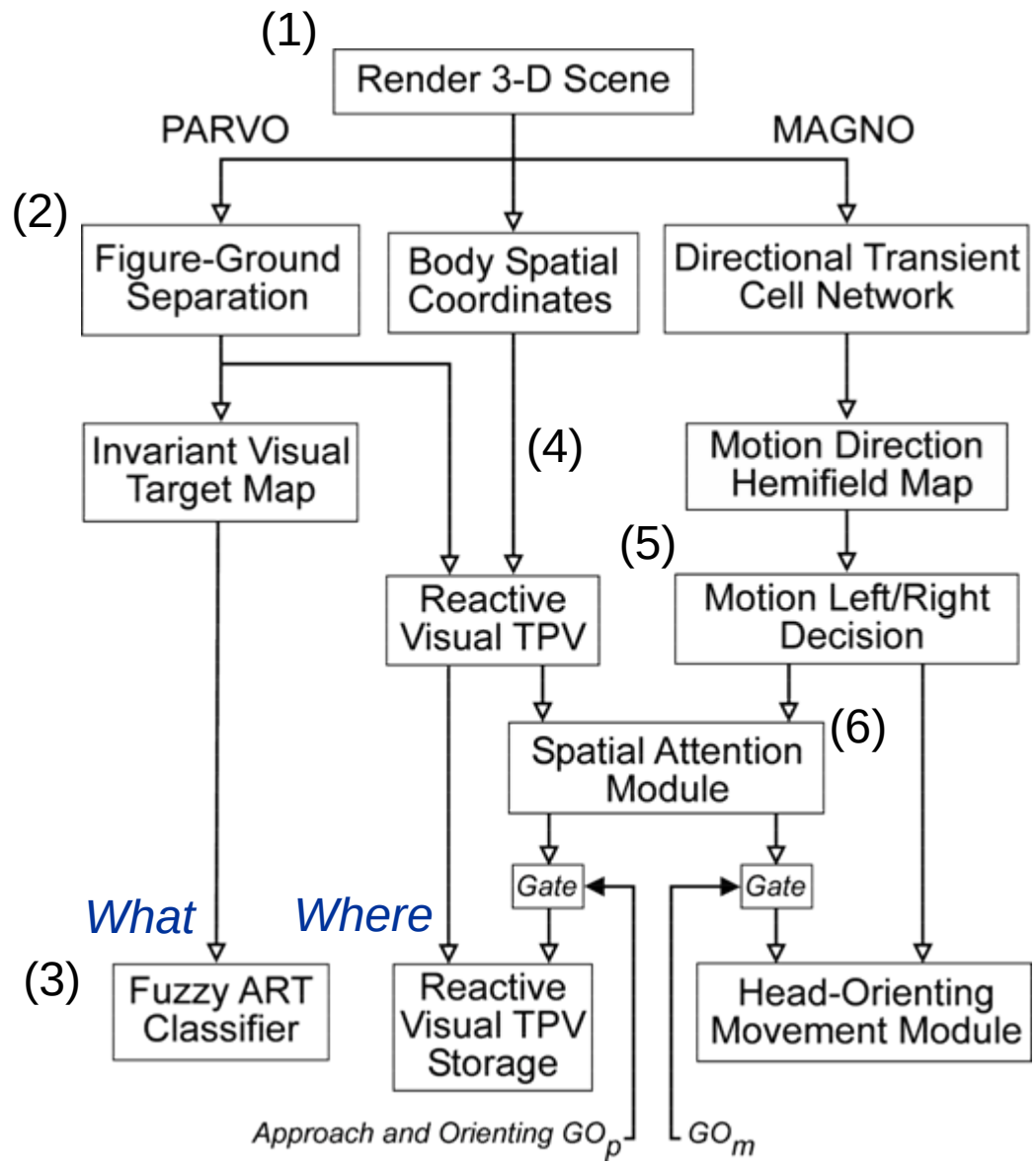

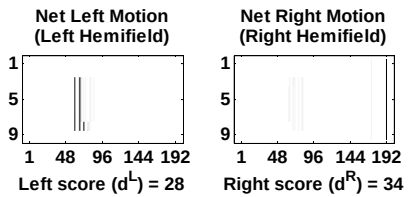

Turn Right

SPATIAL ATTENTION MODULE RIGHT HEAD ORIENTING

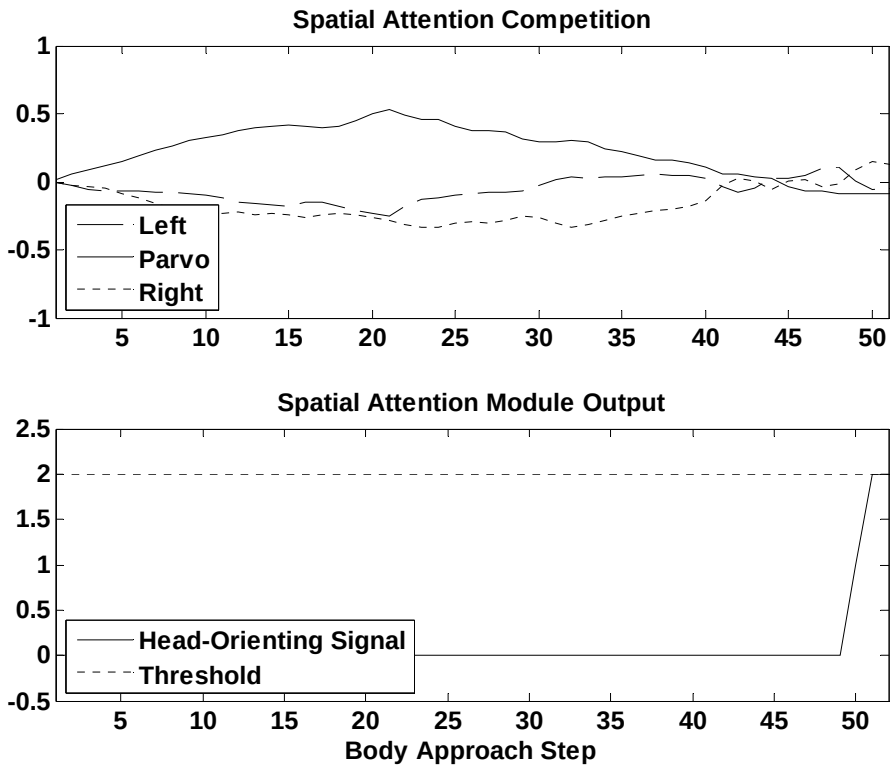

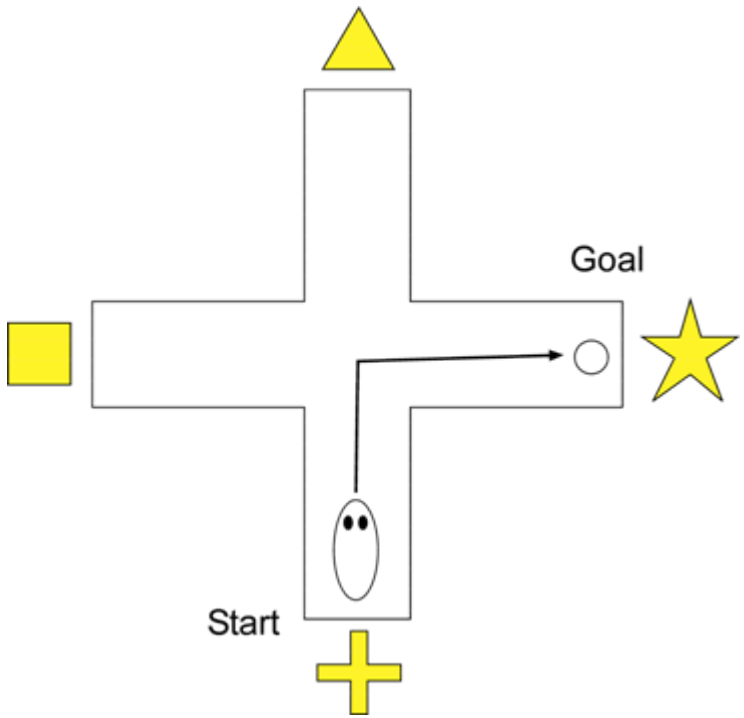

Animat starts shifted <u>right</u> along the corridor centerline

MOTOR APPROACH & ORIENTING SYSTEM

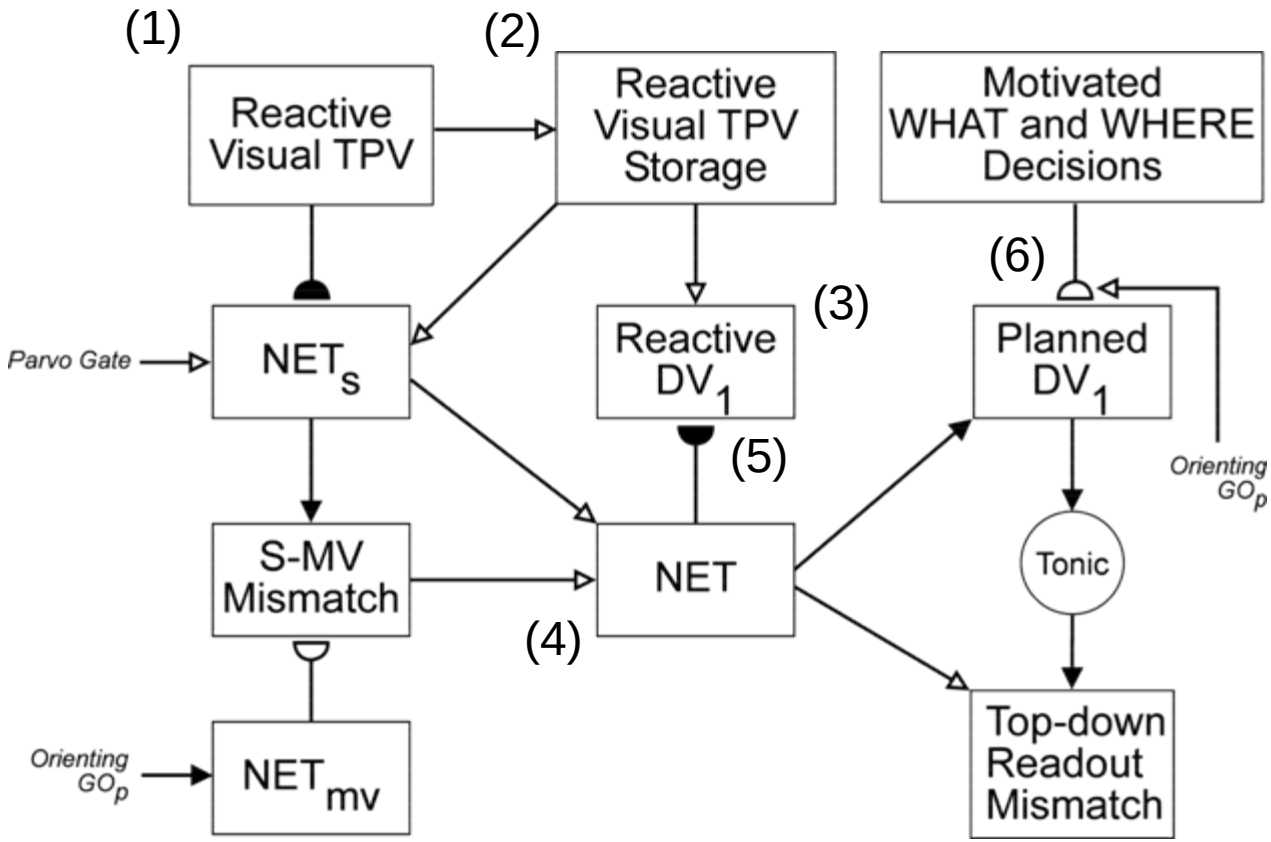

Reactive & Planned DV$_1$ drive head orienting and body approach movements via additional motor circuits …

SENSORY-MOTOR NET MOVEMENT

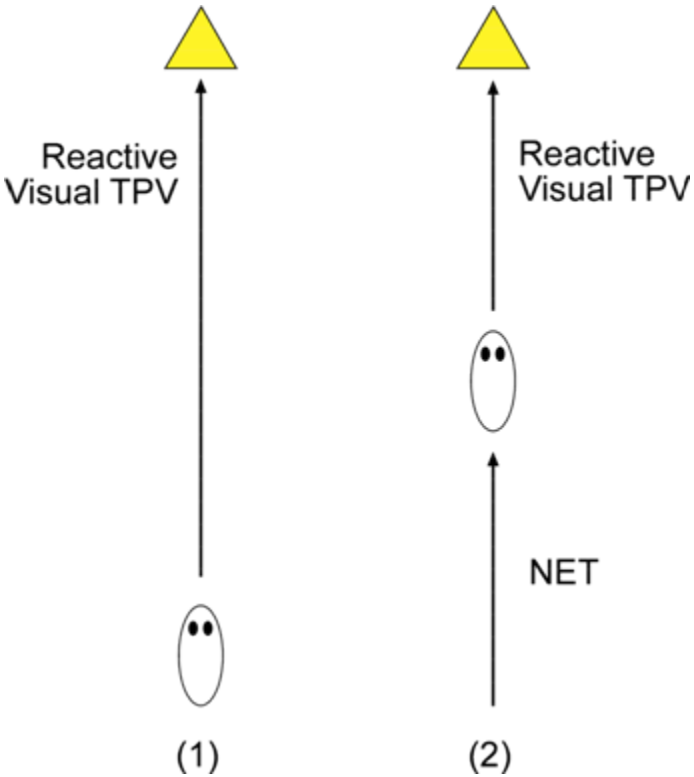

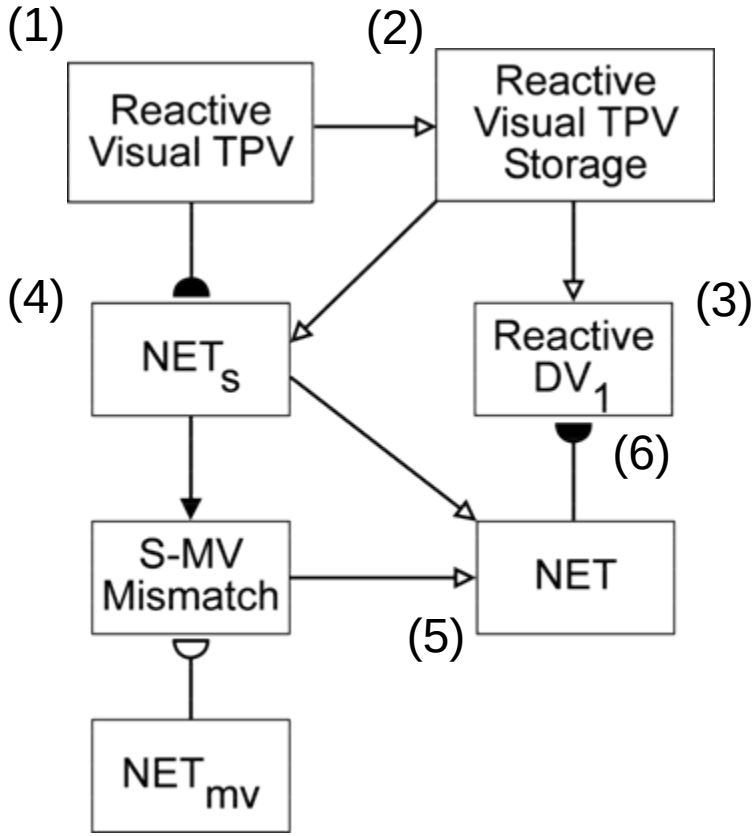

Compute NET displacement by subtracting current Reactive Visual TPV from the Reactive Visual TPV Storage.

VISUAL WORKING MEMORY & PLANNING SYSTEM

- **A SYNTHESIS OF NEURAL MODELS**
  - **ART fast incremental learning classifiers (Carpenter, et. al., 1992)**
  - **STORE working memories (Bradski, Carpenter, and Grossberg, 1994)**
  - **Masking Field sequence chunking networks (Cohen and Grossberg, 1986, 1987; Grossberg and Myers, 2000; Grossberg and Pearson, 2007)**
  - **Gated Dipoles (Grossberg, 1980)**
  - **CogEM cognitive-emotional circuits for reinforcement learning (Grossberg and Merrill, 1992, 1996; Grossberg, 2000)**
- **Stores sequences, or chunks, of visual object categories in short-term working memory. Visual list chunks can learn to activate motor commands via top-down learning.**

VISUAL WORKING MEMORY & PLANNING SYSTEM

Motivated WHAT decision

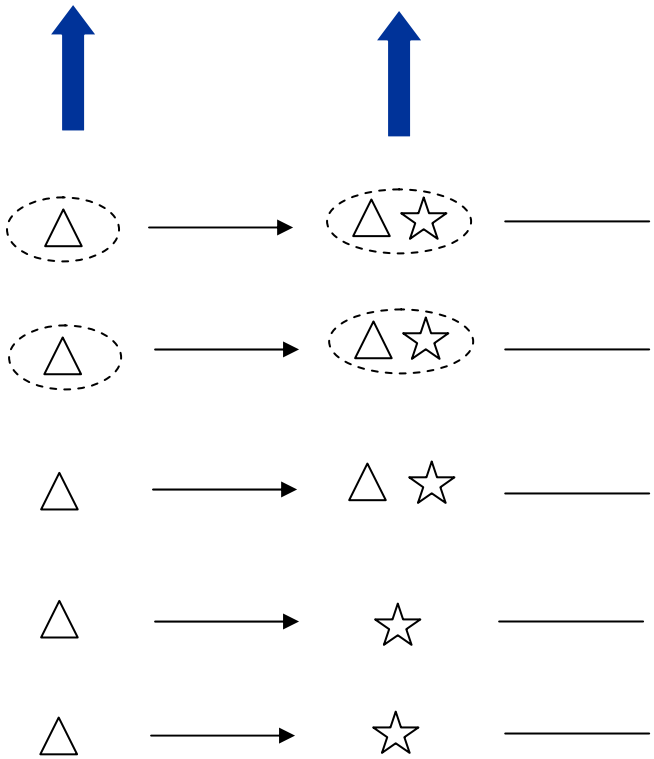

(1) (2)

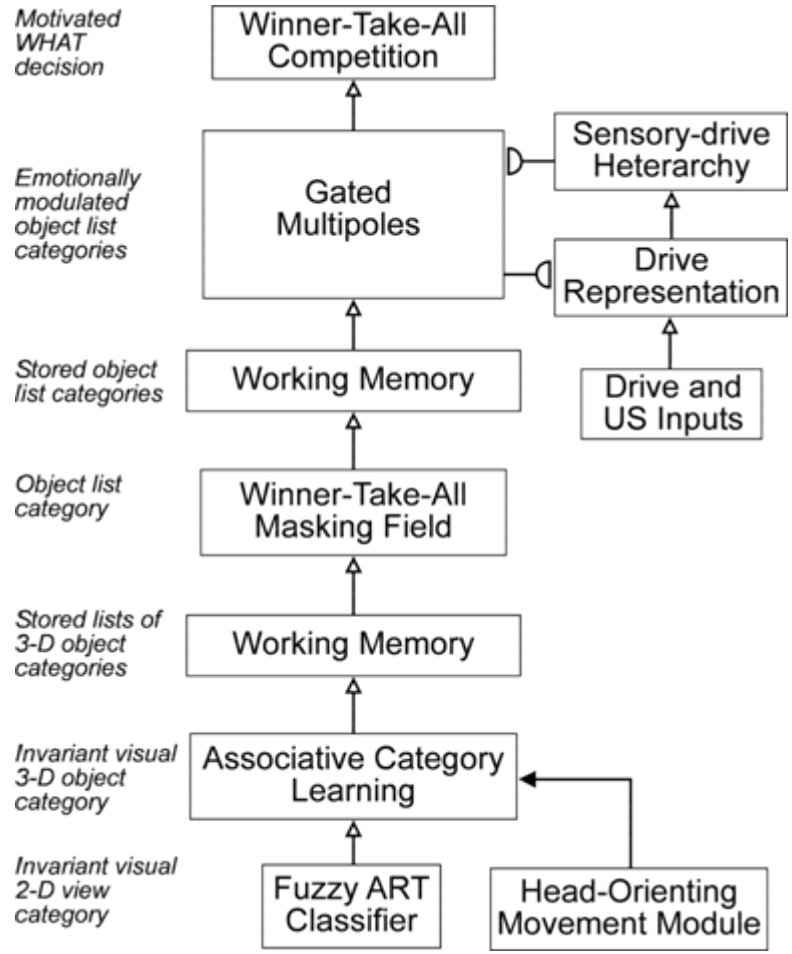

GATED MULTIPOLE MODULE

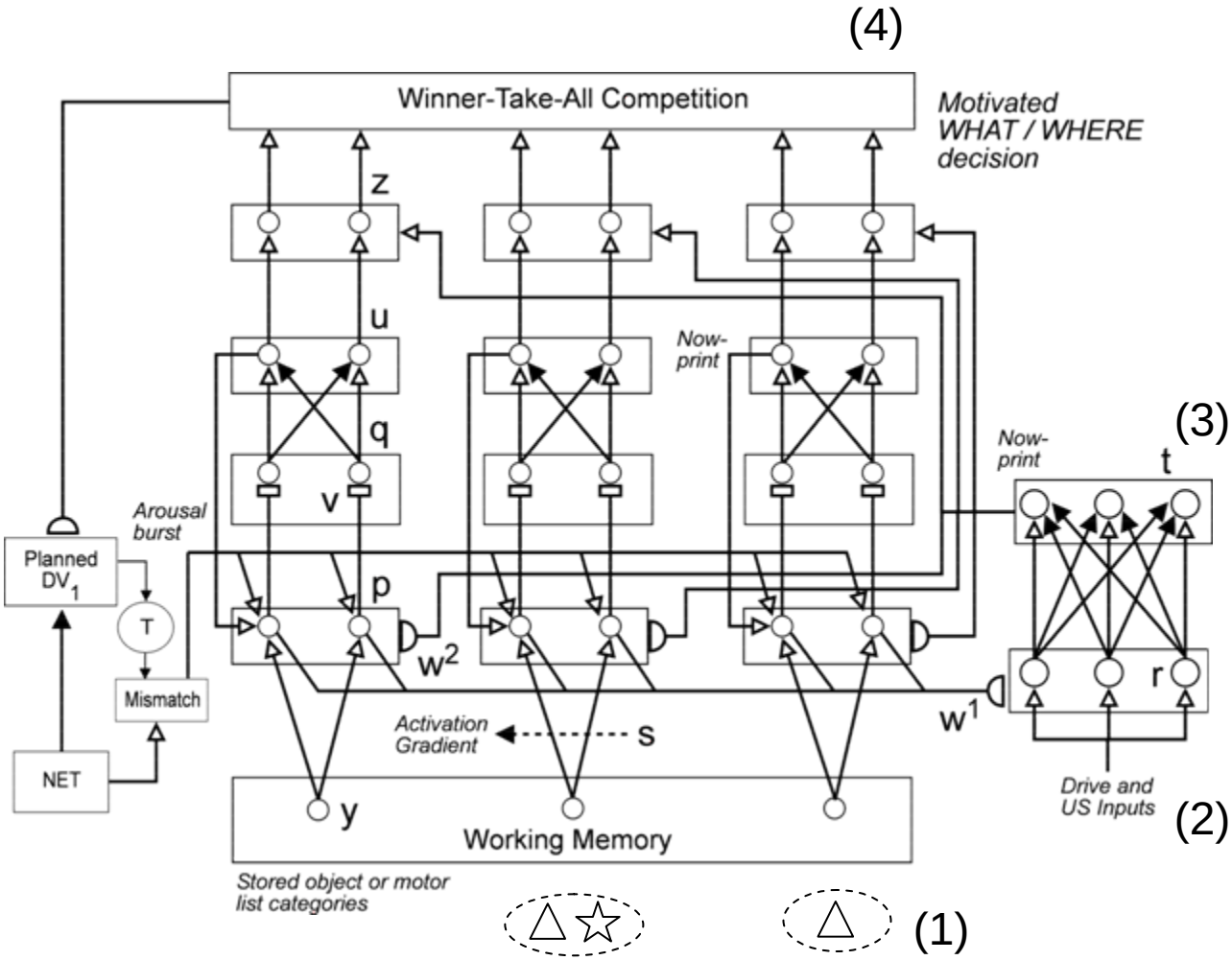

Sensory-Drive Heterarchy

Drive Representation

Sensory, drive and reinforcement combined to select a channel ...

MOTOR WORKING MEMORY & PLANNING SYSTEM

Motivated WHERE decision

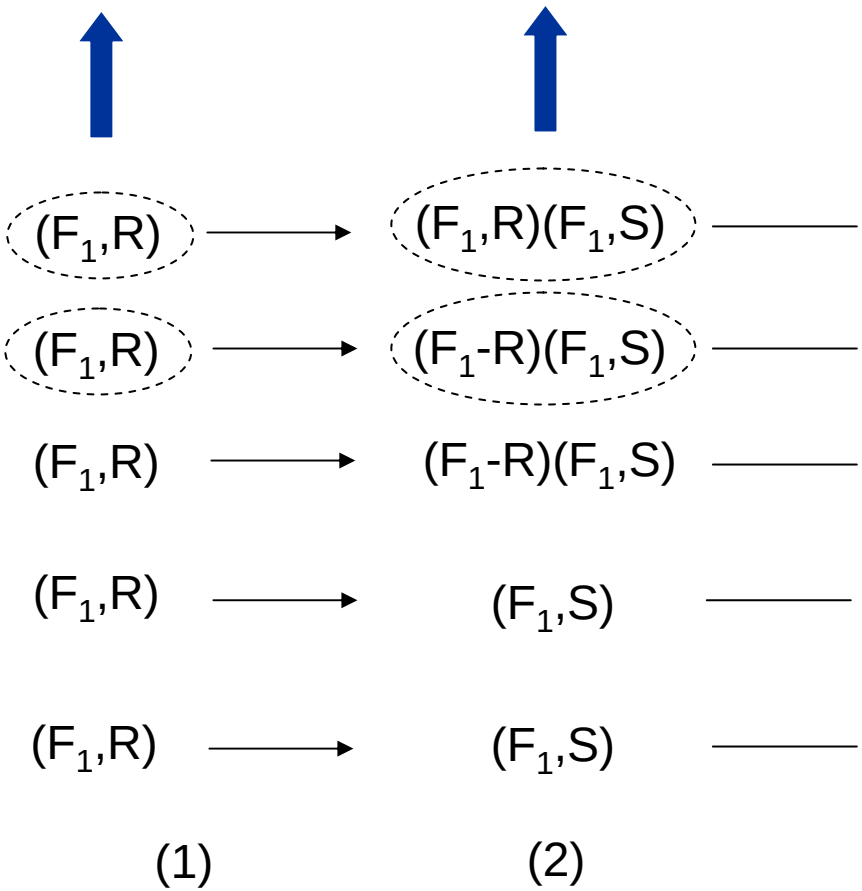

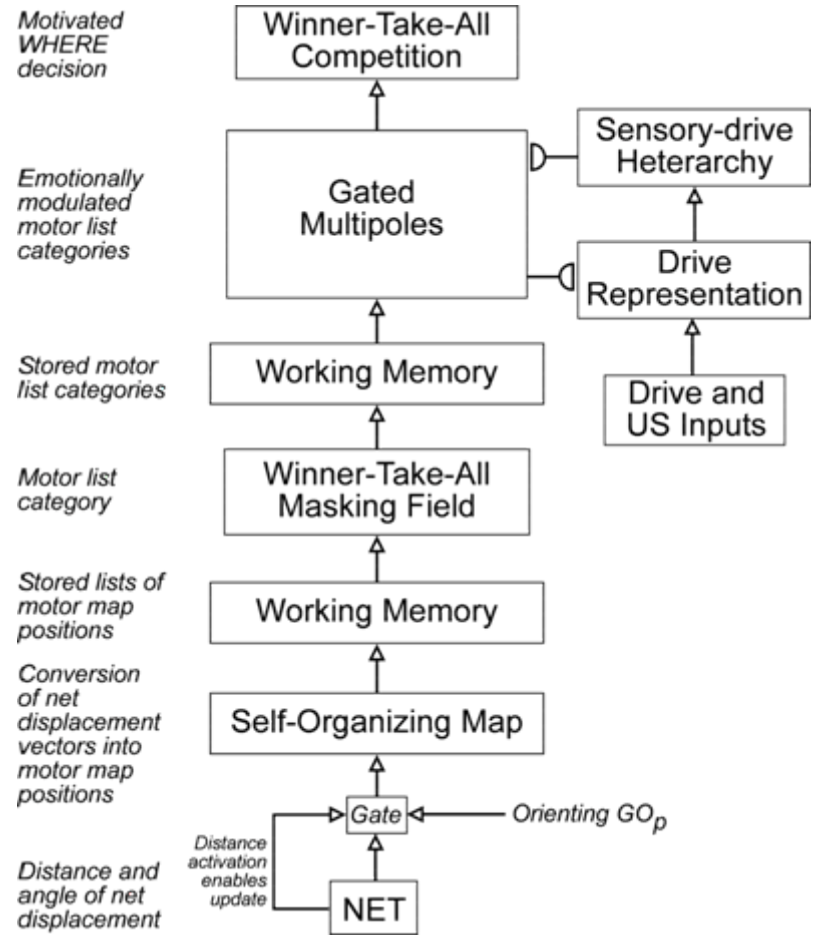

SOVEREIGN: A SELF-ORGANIZING, VISION, EXPECTATION, RECOGNITION, EMOTION, INTELLIGENT, GOAL-ORIENTED NAVIGATION SYSTEM

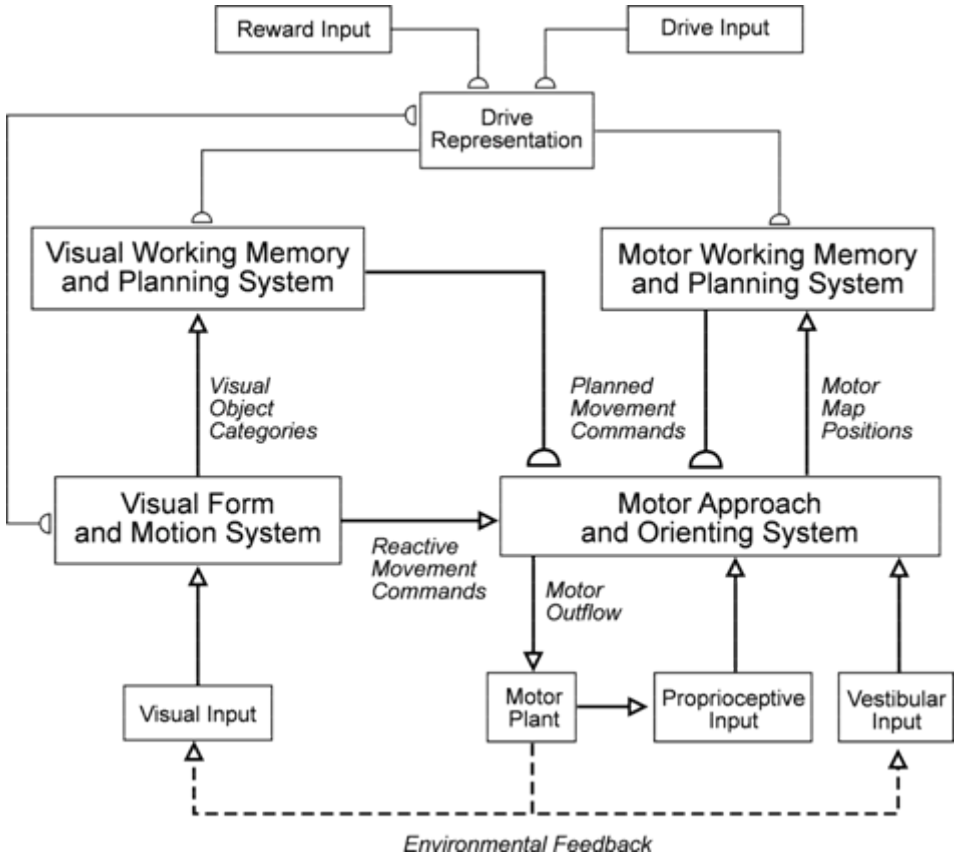

Now what can it do?

SIMULATION RESULTS

1. Learning different paths to different rewards

2. Repeated shuttling for a reward

3. Random exploration to learn the shortest path to a reward

1. LEARNING DIFFERENT PATHS TO DIFFERENT REWARDS

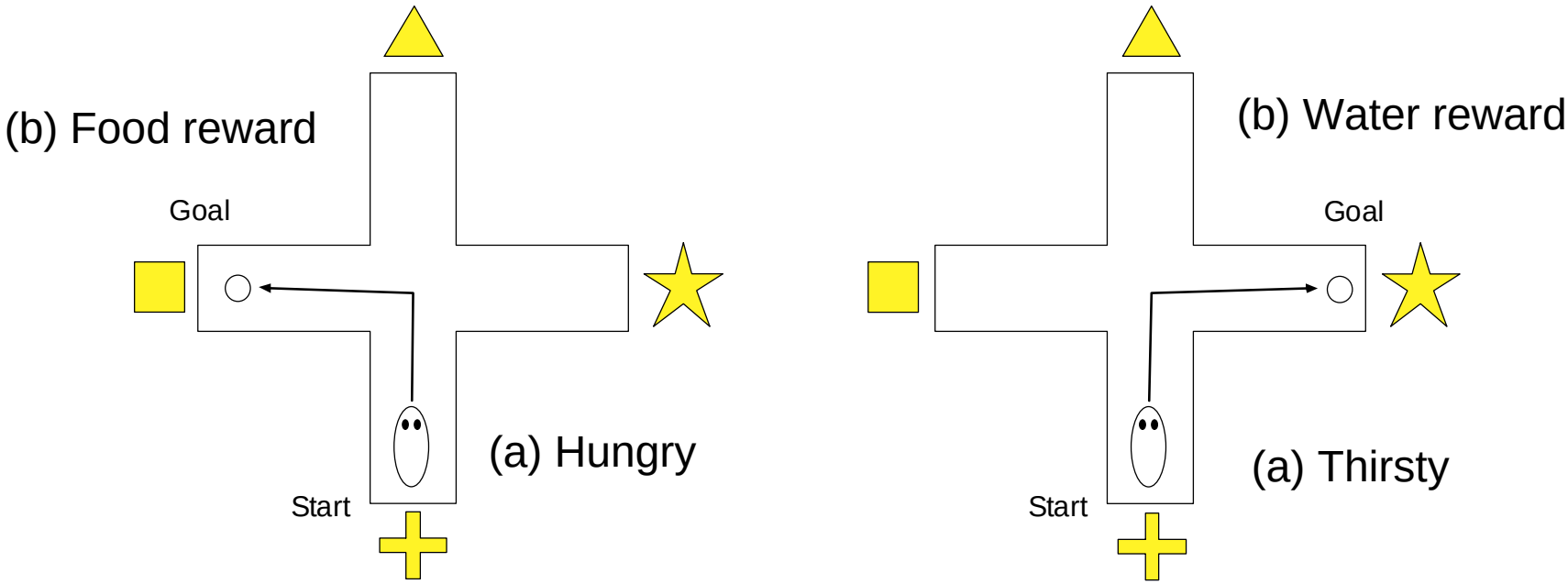

1. **Forward-Left-Forward when Hungry**
2. **Forward-Right-Forward when Thirsty**

SENSORY AND MOTOR LEARNING DURING REACTIVE EXPLORATION

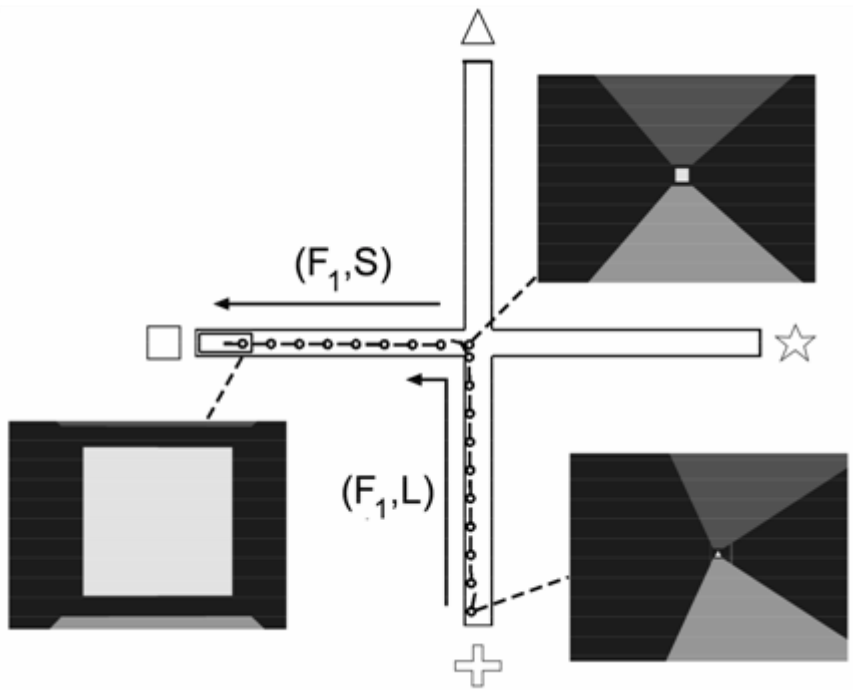

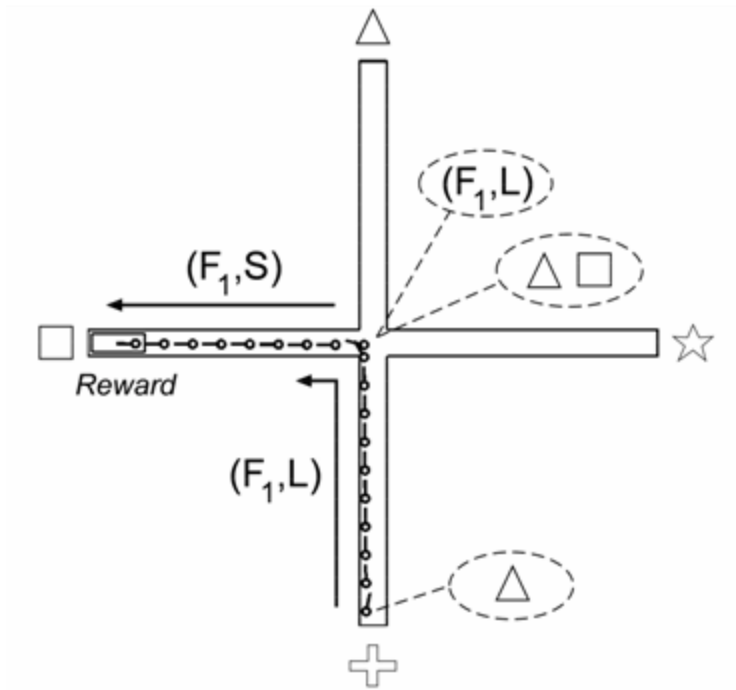

Animat starts shifted to the <u>left</u> of the corridor.

SENSORY AND MOTOR LEARNING DURING REACTIVE EXPLORATION

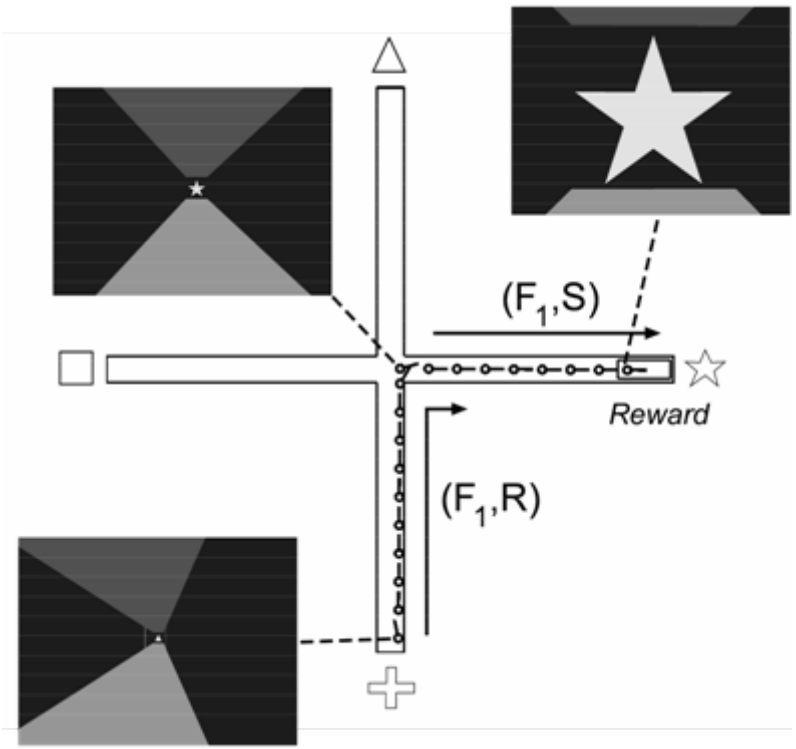

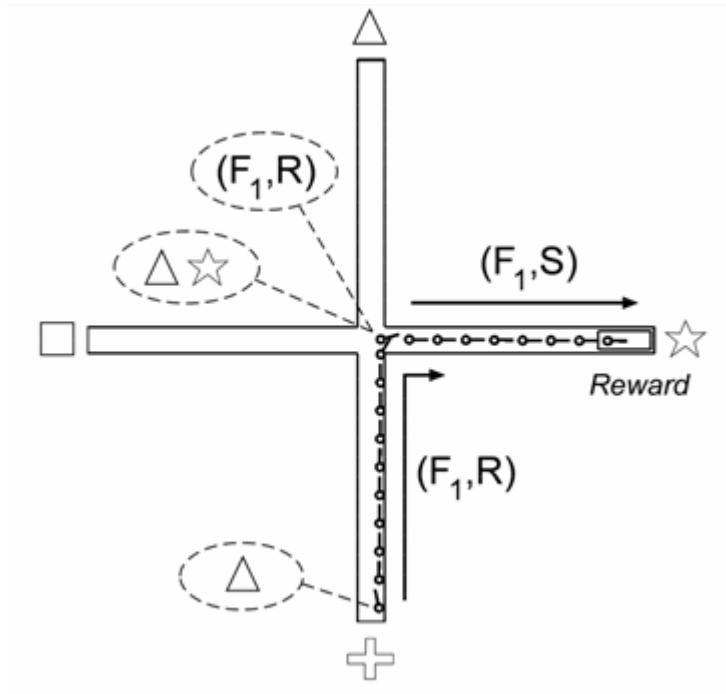

Animat starts shifted to the <u>right</u> of the corridor.

PLANNED RESPONSE AFTER LEARNING

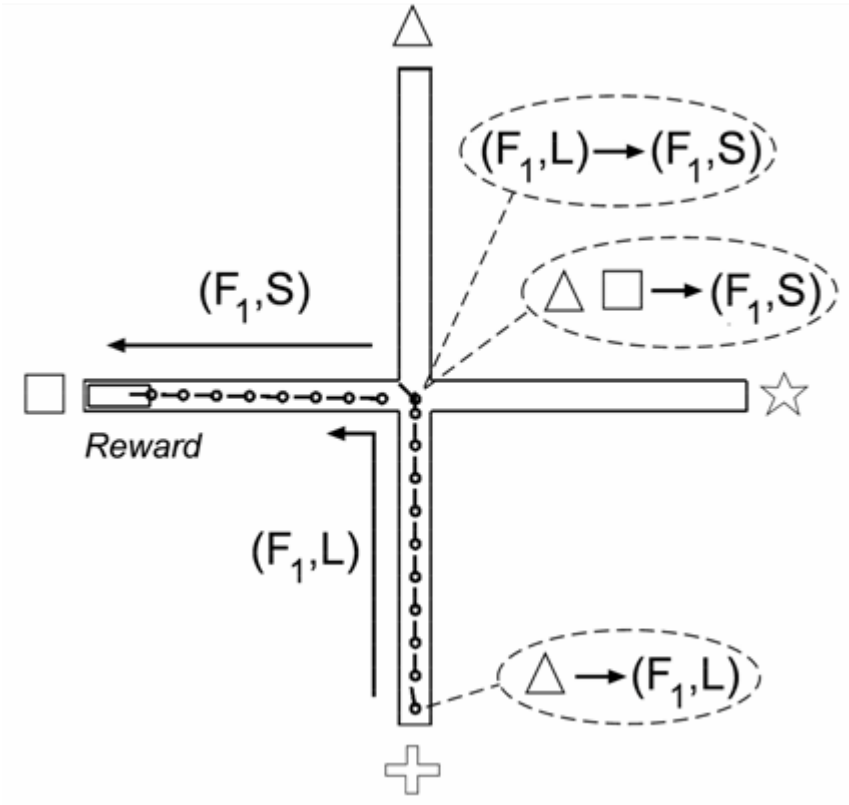

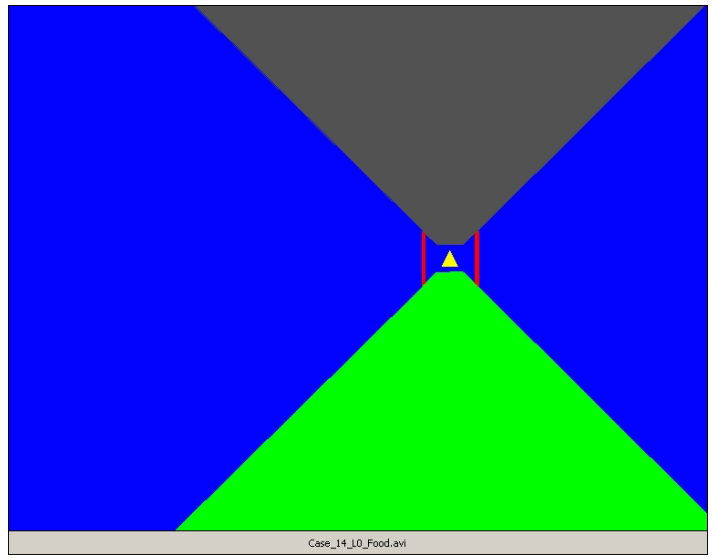

Animat starts along the centerline of the corridor.

PLANNED RESPONSE AFTER LEARNING

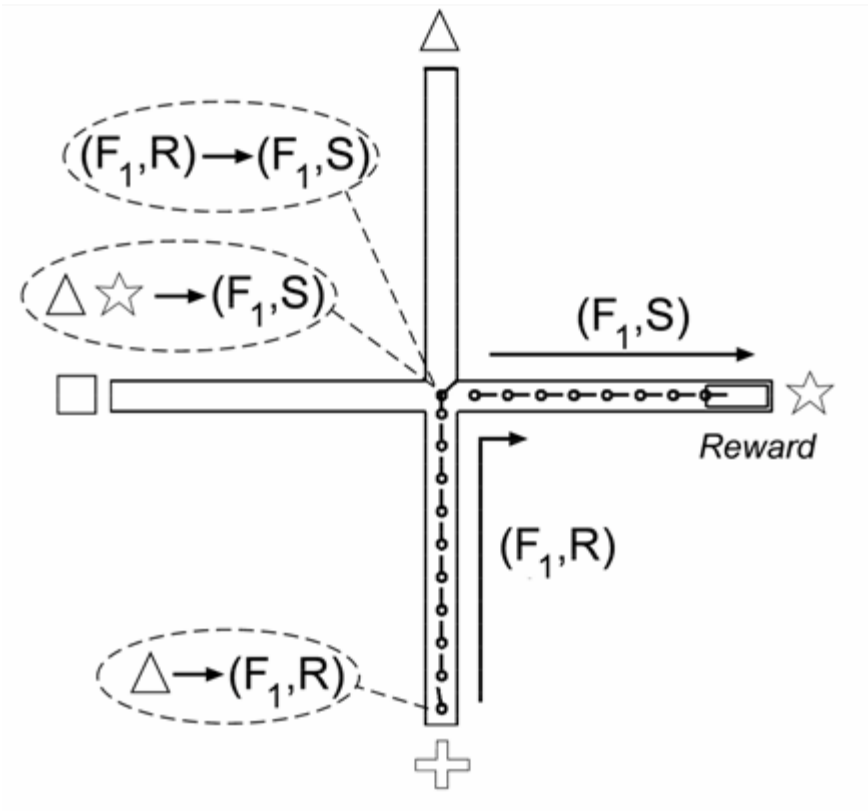

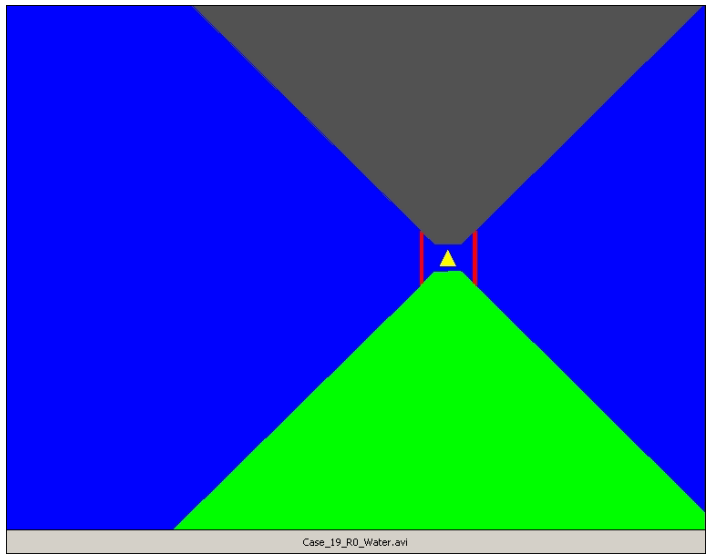

Animat starts along the centerline of the corridor.

SUMMARY

1. Comprehensive end-to-end model
   - Synthesis of several neural models
   - Emphasis on behavioral competency

2. Real-time autonomous environment

3. Multiple kinds of learning
   - Visual categorization
   - Cognitive-emotional
     - Plan
     - Attention
   - Motor calibration

This research was supported in part by Lockheed Martin Corporation, Riverside Research Institute, the Advanced Research Projects Agency (N00014-92-J-4015), the Air Force Office of Scientific Research (F49620-92-J-0225), the National Science Foundation (IRI 90-24877 and SBE-0354378), the Office of Naval Research (N00014-91-J-4100, N00014-92-J-1309, and N00014-95-1-0657), and Pacific Sierra Research (PSR 91-6075-2).

BACKUP

REACTIVE APPROACH SEQUENCE

TIME

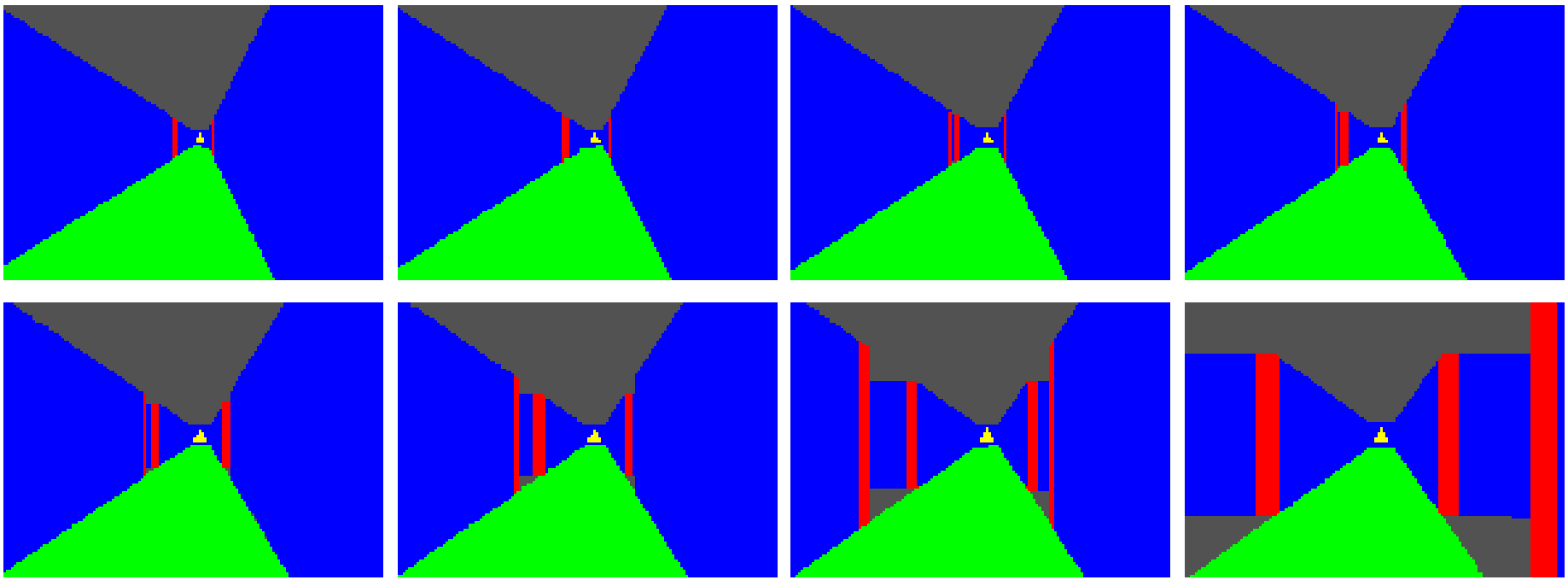

The animat homes toward the visual target until motion signals trigger a reactive head movement.

REACTIVE ORIENTING SEQUENCE

TIME

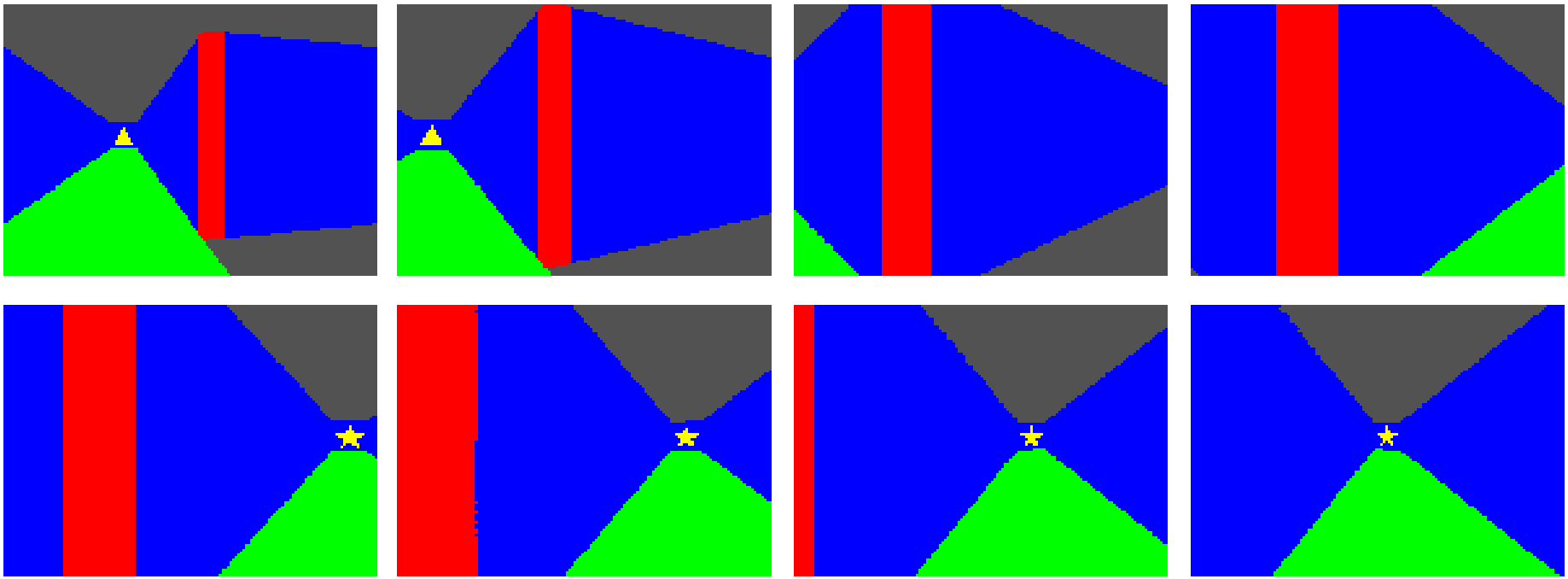

A reactive head orienting movement brings a new visual target object into view.

3D VIRTUAL REALITY SIMULATION

- 3D perspective views
  - Generated in real time
  - Implemented in *Matlab* with *OpenGL* graphics

- Model components
  - Systems of nonlinear differential equations
    - Visual Processing
    - Cognitive-Emotional Decision-making
    - Motor Responses
  - Updated step-by-step during animat motion

THE DIRECT MODEL OF ARM REACHING

Because the arm is attached to the body, the present position of the arm can be directly computed.

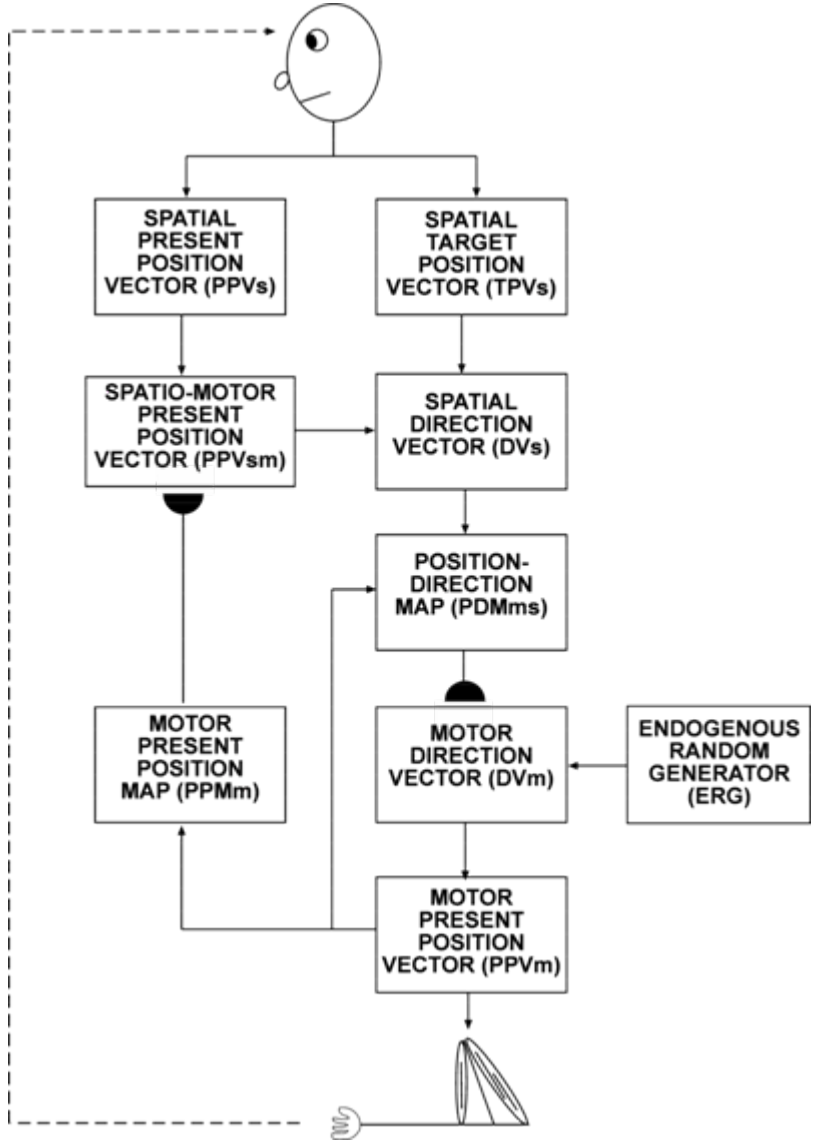

Bullock, D., Grossberg, S., and Guenther, F. H. (1993). A self–organizing neural model of motor equivalent reaching and tool use by a multijoint arm. *Journal of Cognitive Neuroscience, 5,* 4, 408–435.

MOTOR DV MODULE

A control hierarchy to reconcile the priority of reactive or planned head-orienting and body-approach commands

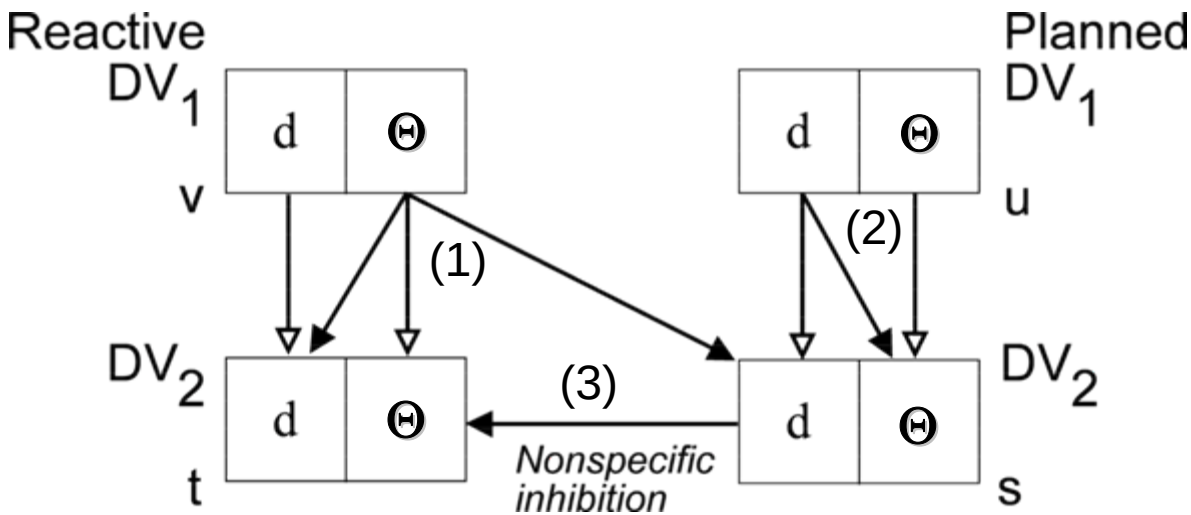

1. **Reactive Orienting before Reactive/Planned Approach**
2. **Planned Approach before Planned Orienting**
3. **Planned movement before Reactive movement**

REACTIVE MOVEMENT PROCESSING

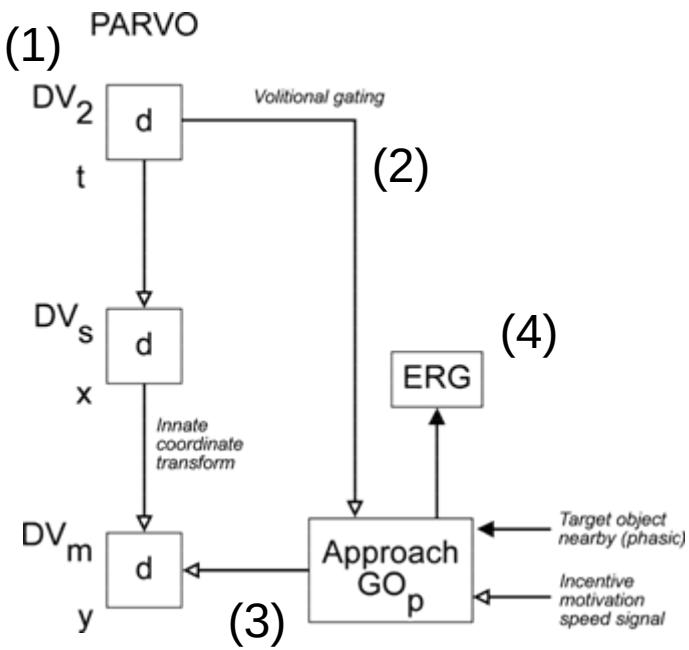

Body-approach Command

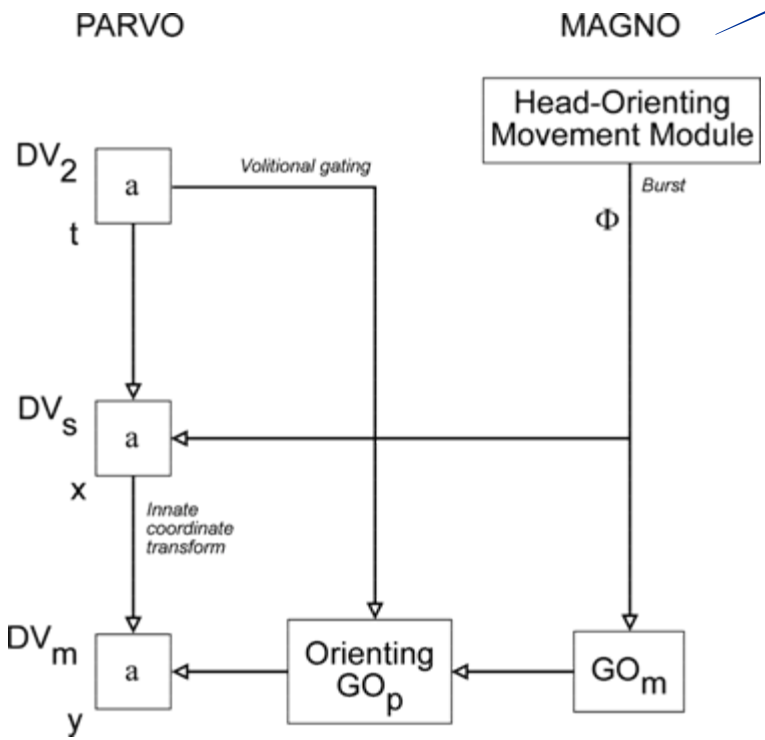

Head-orienting Command

Volitional (GO) and endogenous (ERG, Endogenous Random Generator) gates to release consummatory and exploratory behaviors (Bullock and Grossberg, 1988; Gaudiano and Grossberg, 1991; Pribe, Grossberg, and Cohen, 1997)

SIMULATION WALKTHROUGH

1. Compute the head-centered coordinates of the triangle cue
2. Convert to body-centered coordinates
3. Compute a reactive head-orienting and body-approach movement to reach the triangle cue
4. Rotate the head to face the triangle cue
5. Store the triangle cue in the Visual Working Memory and Planning System
6. Approach the triangle cue

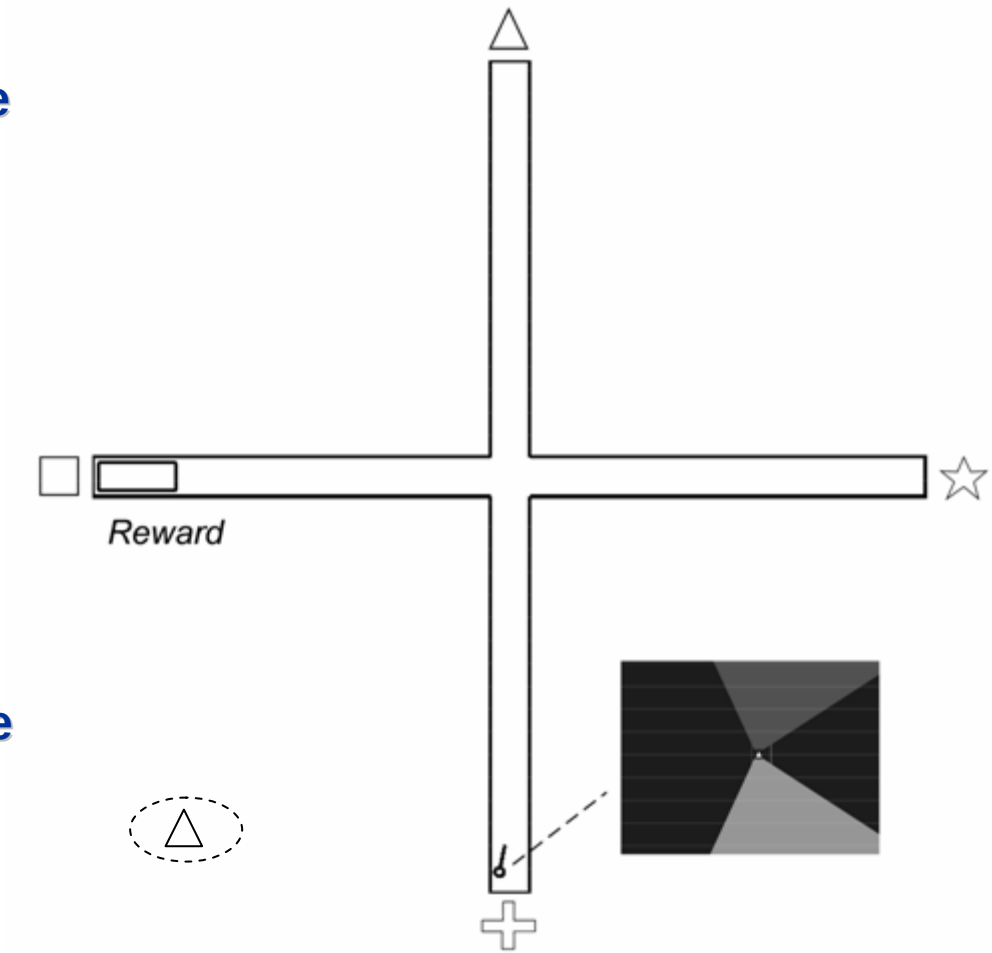

REACTIVE APPROACH

1. The left hemifield motion response is consistently larger because the motion cues are closer
2. While approaching, update the Motion Left/Right Decision module
3. When the left hemifield motion signals are strong enough, then the Head-orienting Movement module will command a head-orienting turn, or attentional shift, to the left

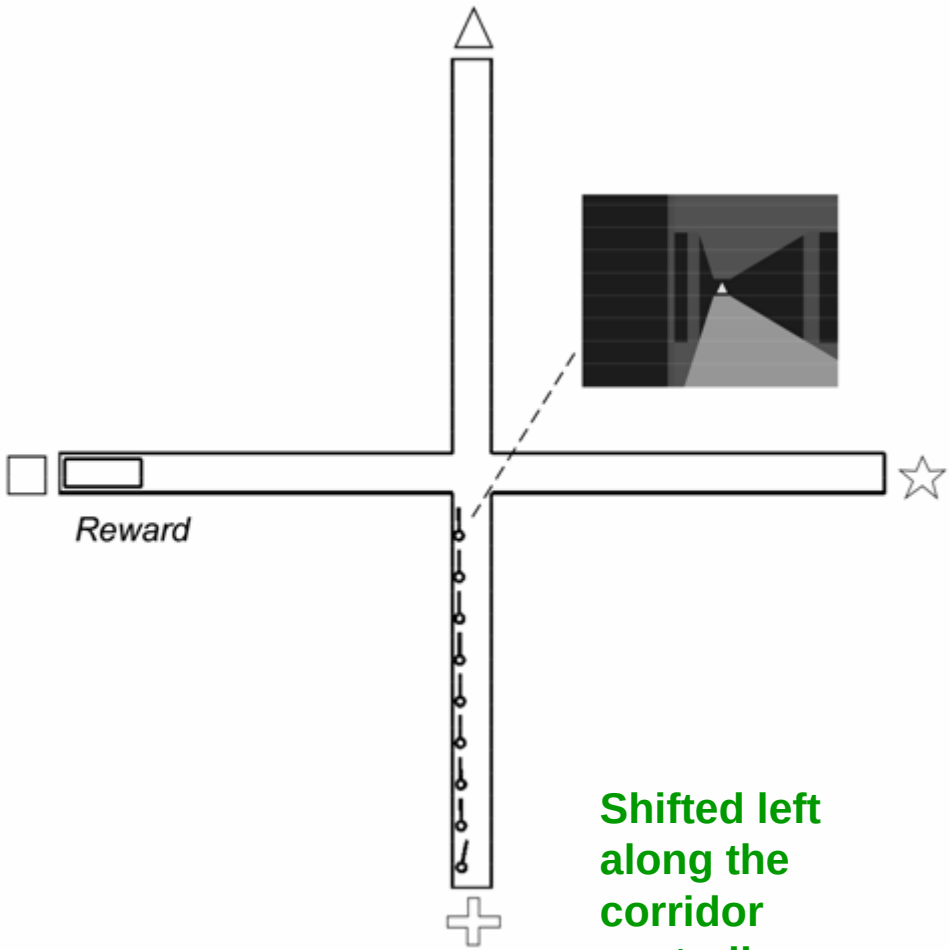

Shifted left along the corridor centerline

REACTIVE ORIENTING

1. Continue head-orienting until facing the square cue
2. The Triangle chunk learns the Forward-Left movement command
3. Store the Forward-Left movement in the Motor Working Memory and Planning System

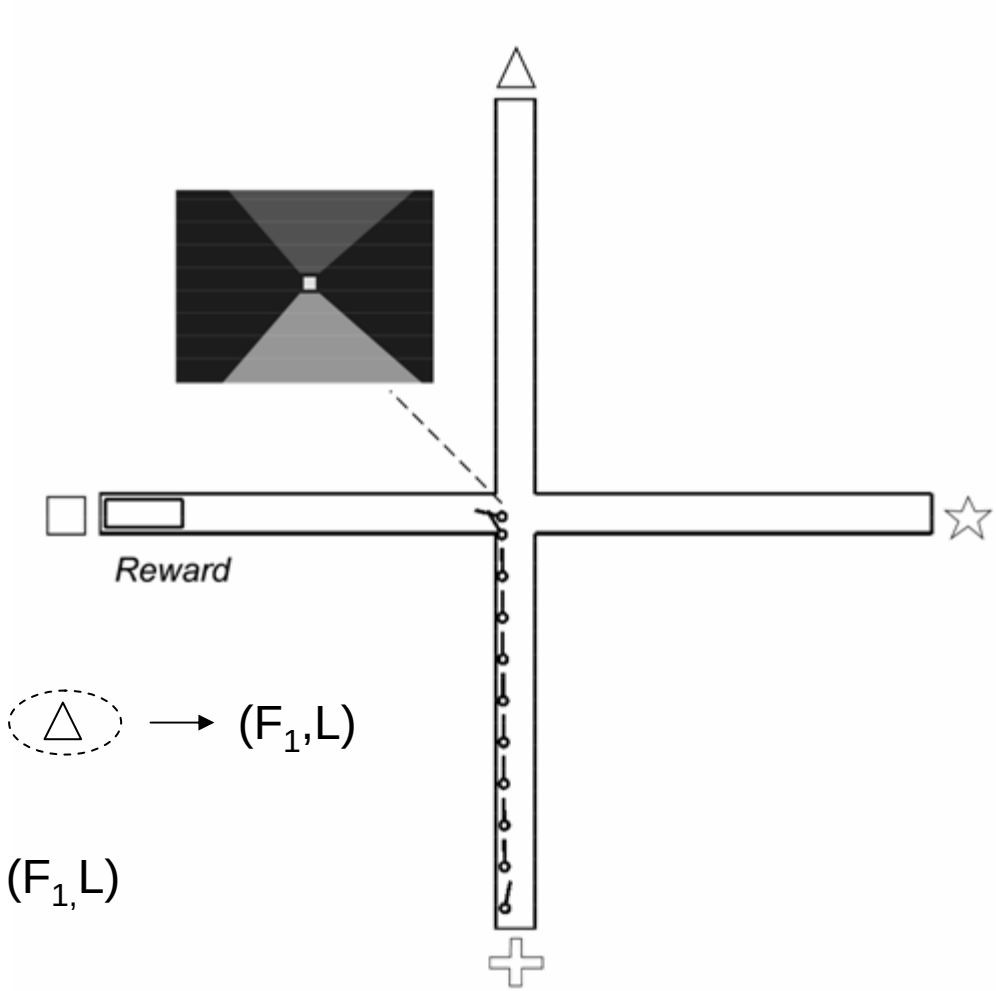

REACTIVE APPROACH TO RECEIVE REWARD

1. Compute a reactive body-approach movement to reach the square cue
2. Store the square cue in the Visual Working Memory and Planning System
3. Approach the square cue
4. Reward activates the US learning signal
5. Associate the Triangle-Square and Forward-Left chunks with the hunger drive
6. Both chunks sample the Forward-Straight movement command

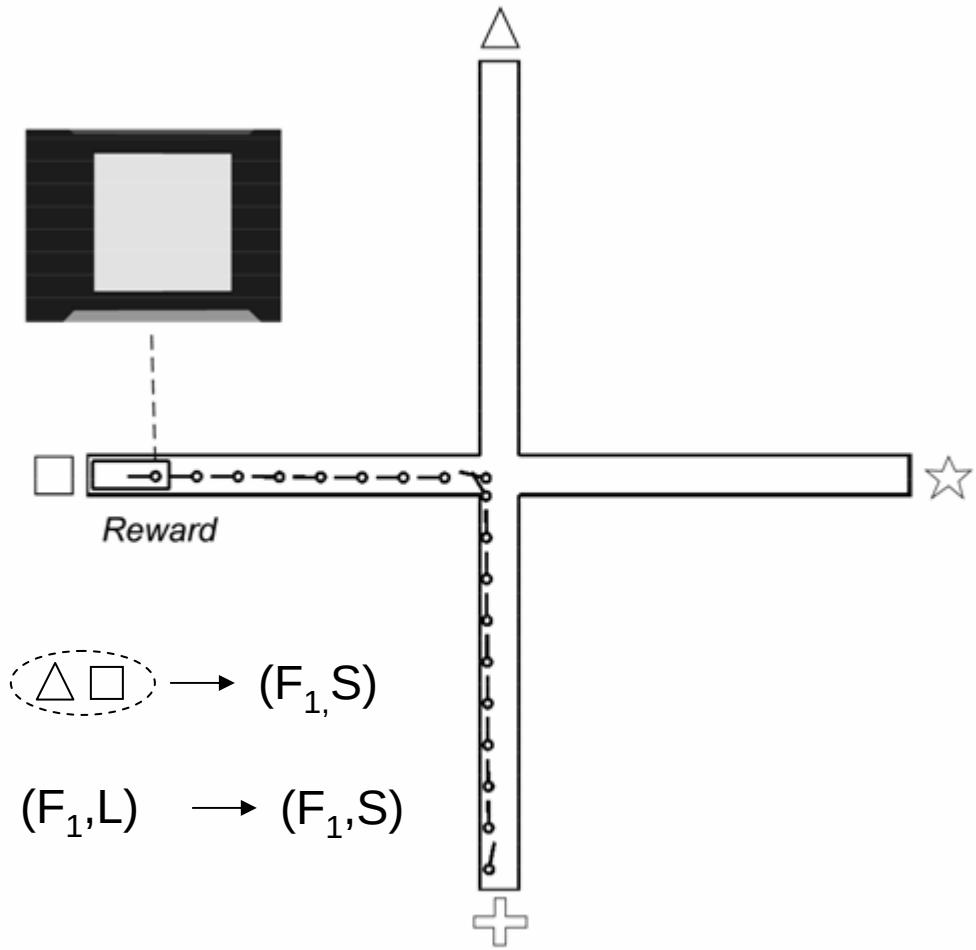

2. REPEATED SHUTTLING FOR A REWARD

Revisit goal locations while hungry to receive additional reward.

Move Forward-Left, Forward-Turnaround, Forward-Turnaround,

etc.

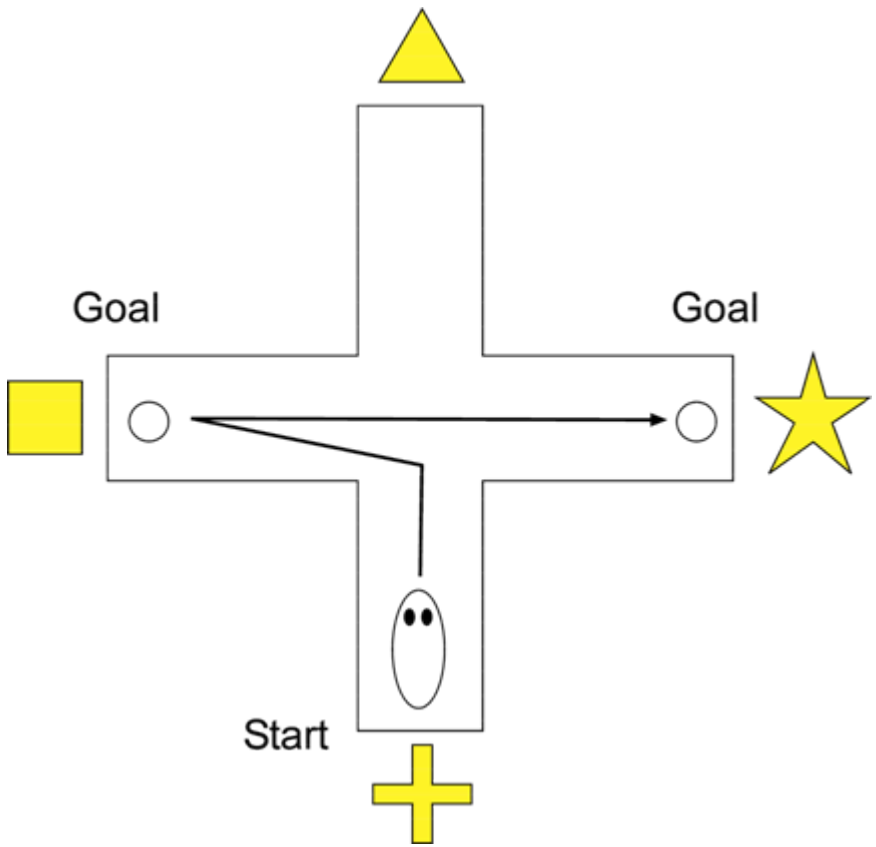

SENSORY AND MOTOR LEARNING DURING REACTIVE EXPLORATION

Typical route with left shift

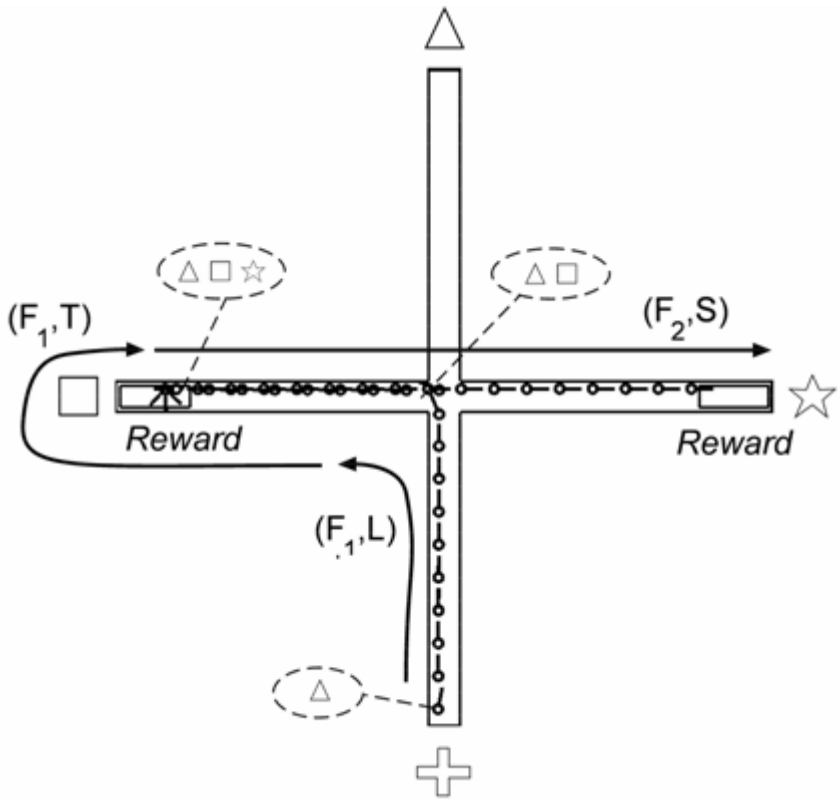

- **Motor : Forward-left, Forward-Turnaround, Forward-Turnaround, ...**
- **Visual : Triangle, Square, Star, Square, ...**

PLANNED RESPONSE AFTER LEARNING

Vision chunks start to repeat ...

△	→	(F_1,L)
△ □	→	(F_1,T)
△ □ ☆	→	(F_2,T)
□ ☆ □	→	(F_2,T)
☆ □ ☆	→	(F_2,T)
□ ☆ □	→	(F_2,T)

etc. **etc.**

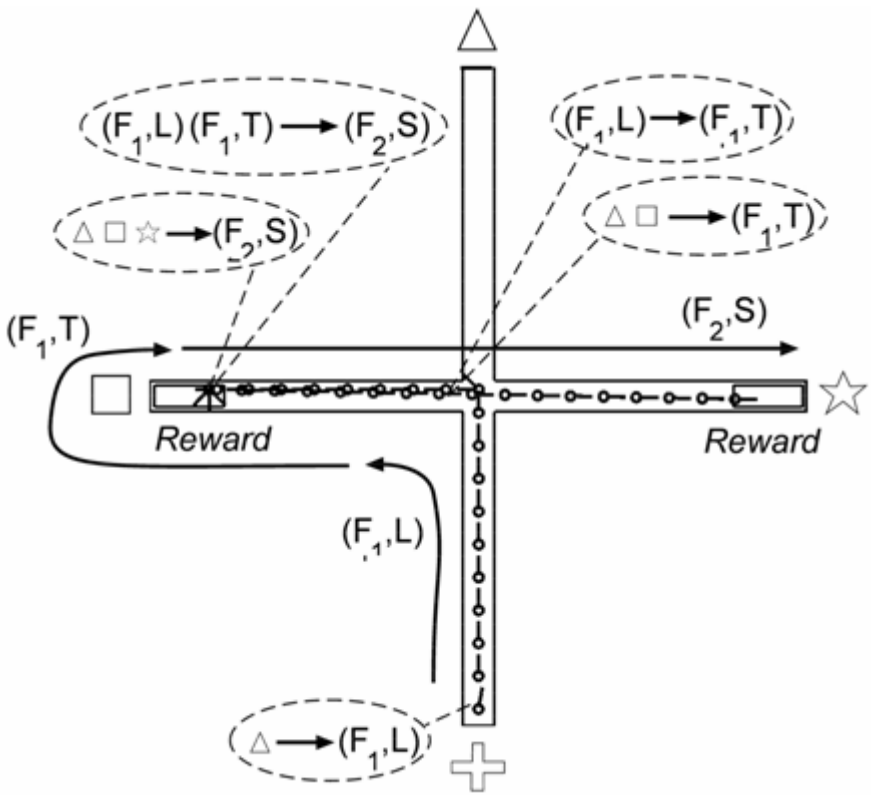

as well as the motor chunks, and so can control the repeated shuttling movements.

3. RANDOM EXPLORATION TO LEARN THE SHORTEST PATH TO A REWARD

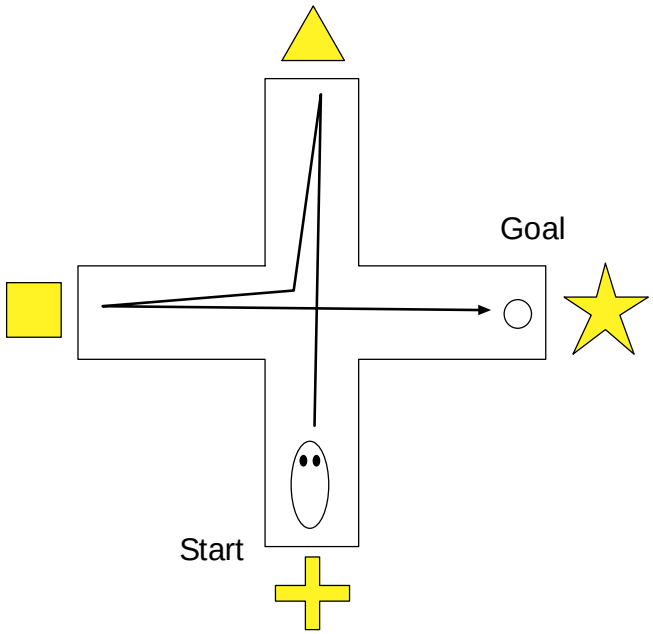

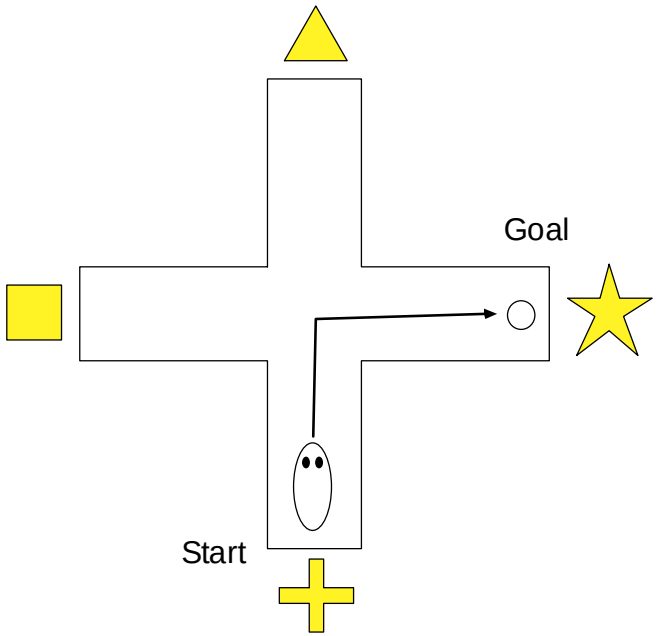

The model can readout different sensory-motor sequences under different motivational states and learns more efficient paths to rewarded goals as exploration proceeds.

SENSORY AND MOTOR LEARNING DURING REACTIVE EXPLORATION

Typical route with left shift

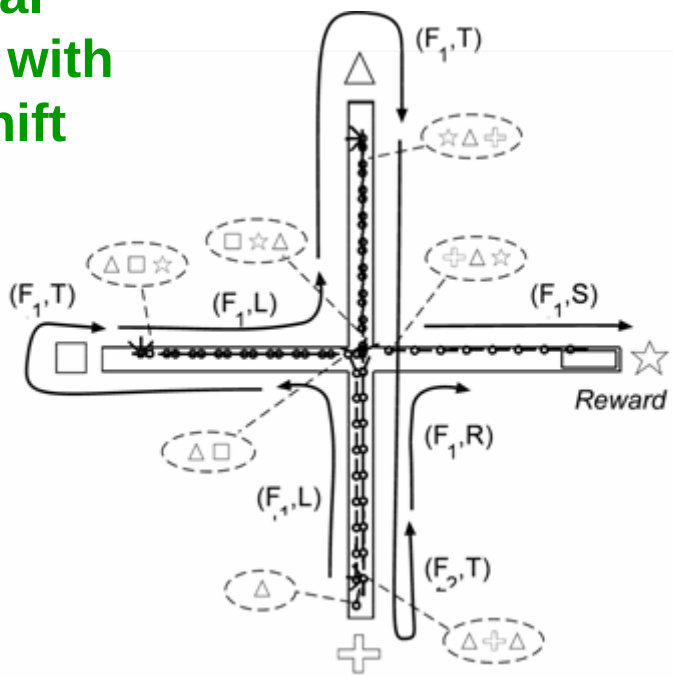

Typical route with right shift

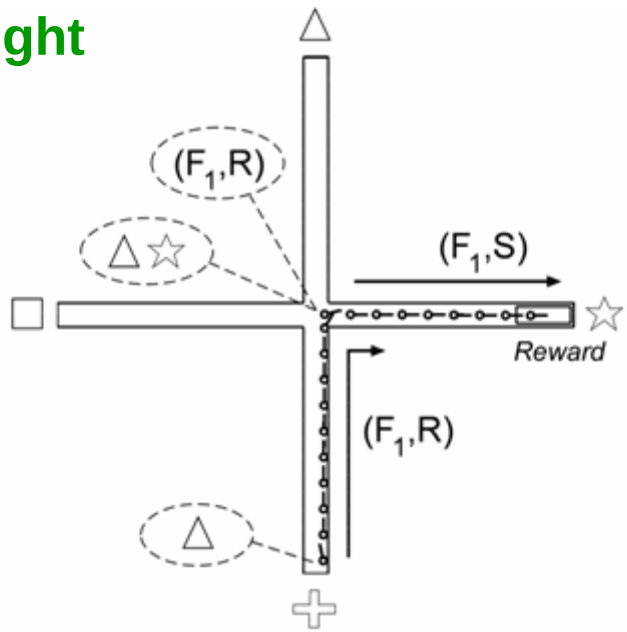

Perform 10 runs with random initial left/right corridor shifts.

PLANNED RESPONSE AFTER LEARNING

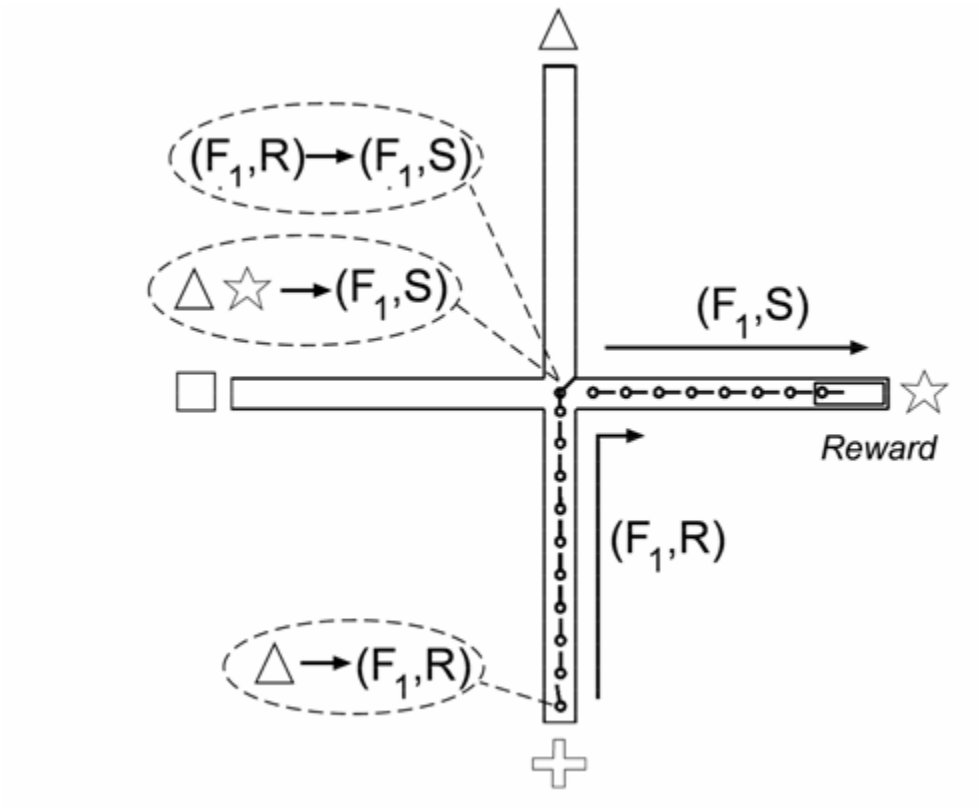

The route most often reinforced is selectively amplified by the plan memory and can be directly readout under the appropriate motivational state.

SHUTTLING EXAMPLE MOVIE

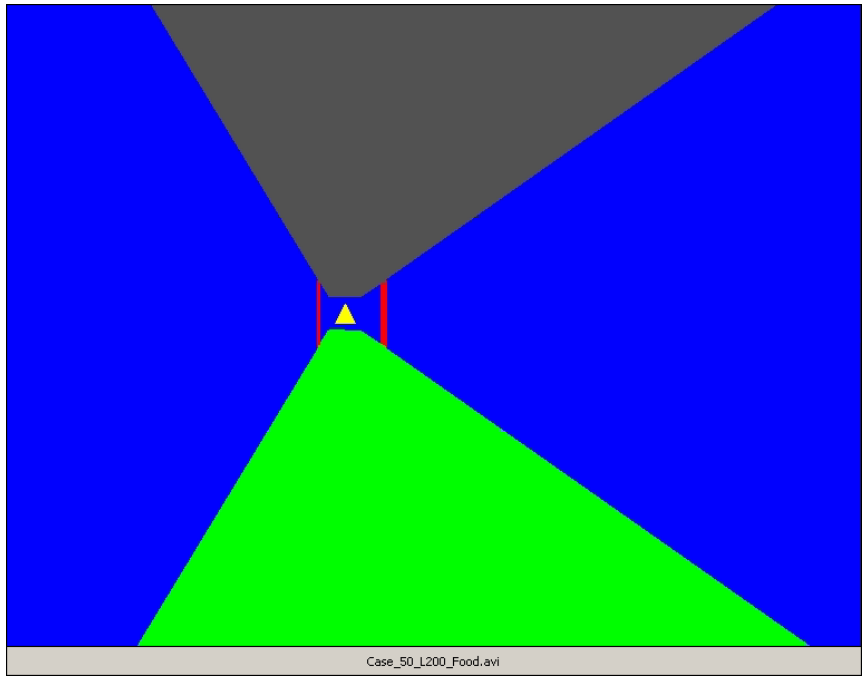

Reactive exploration with initial left corridor shift.