Lessons Learned in Using and Adapting an Information Exchange Data Model

Sam Chamberlain, Ph.D.

US Army Research Laboratory
In Support of The Joint Staff / J-8 / MASO
(410) 278-8948 // DSN 298
chambesc@js.pentagon.mil, *or*
sam.chamberlain@us.army.mil

LTC Ilean Keltz, USA, Ph.D.

The Joint Staff / J-8 / MASO
8000 Joint Staff Pentagon
Washington, DC 20318-8000
703-697-7434
ilean.keltz@js.pentagon.mil

13th ICCRTS, Bellevue, WA 18 June 2008

History

- **Global Force Management (GFM) Community of Interest (COI) initiated the GFM Data Initiative (DI) to unify force structure data and semantics across the DOD (Services, Joint, & OSD – later, Intel Community joined).**
- **Strategy – Force structure ties everything together, so at a minimum, this part of the puzzle needs to be clearly understandable (semantics) across the enterprise.**
- **Decided on a unified front: the six data sources will appear as one – common semantics and interface.**
- **Policy used to enforces the decisions is DODI 8260.03, *Organizational and Force Structure Construct (OFSC) for Global Force Management (GFM)*.**

Background

- **Have a common semantics via the GFM OFSC.**
- **Next, GFM DI needed an interface specification – two options: build a <u>new</u> one or exploit an <u>existing</u> one.**
- **Decided to exploit an existing one.**
  Begin with a subset of the JC3IEDM (C2IEDM at the time) and augment where needed, because:
  [1] Data models were understood by most of the team.
  [2] Intellectual effort and documentation already expended,
  [3] It was good enough for the small subset being used,
  [4] Had some coalition buy in (kill two birds …)
- **Great intentions.**

Lessons – Not By Precedence

Lesson 1: ***The details of the Net Centric Data Strategy (NCDS) can be interpreted and implemented in a variety of ways***

Lesson 2: ***The pros and cons of reuse versus building from scratch are about equal***

Lesson 3: ***The complexity of the problem increases exponentially with the scope of the data***

Lesson 4: ***It is easy to forget what the IE means in IEDM***

Lesson 5: ***Augmentation does not require modification to the original model.***

Lesson 6: ***Remove enumerated data values out of the IEDM whenever possible.***

Lesson 7: ***Identifier management remains an issue.***

Lesson 8: ***Accessibility does not obligate permission to access.***

Lesson 1 Example: It Depends on Where the Boundaries are Placed

The details of the Net Centric Data Strategy can be interpreted and implemented in a variety of ways:

No matter where one draws the boundaries there will be objections.

Is a unified front worth the pain?

"Where you stand depends on where you sit."

Boundary Options

"Where you stand depends on where you sit."

X

Applications

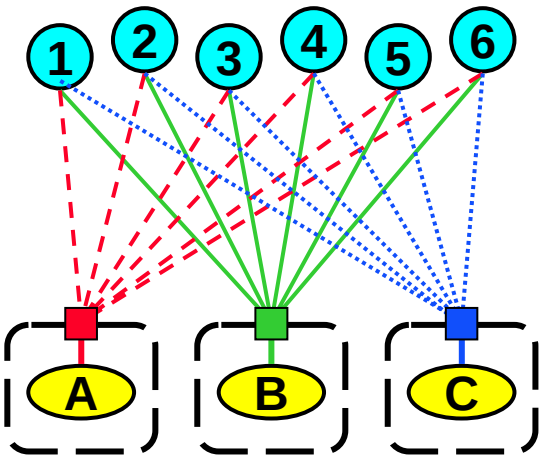

Individual Component Boundaries

Y

Applications

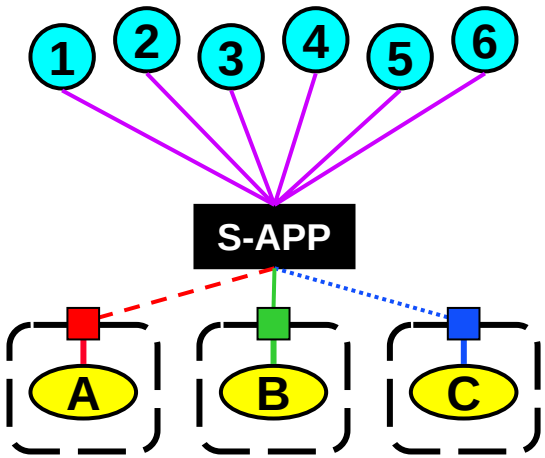

Individual Component Boundaries – Single "Super Converter" App.

Z

Applications

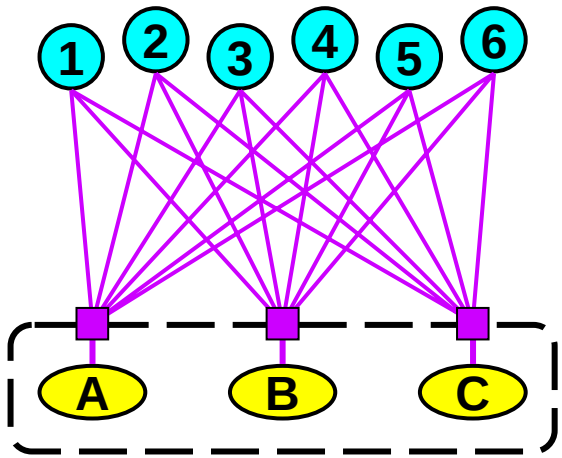

GFM DI Community Boundary "Unified Front"

Lesson 2: The pros and cons of reuse versus building from scratch are about equal

Subjective comment from experience.

Challenges appear in different places.

Lesson 3: The complexity of the problem increases exponentially with the scope of the data

Example: started with Org Tree, then added Org-Type and manpower data; Why? Because all existing force structure documents included it. Crews required Materiel-Types.

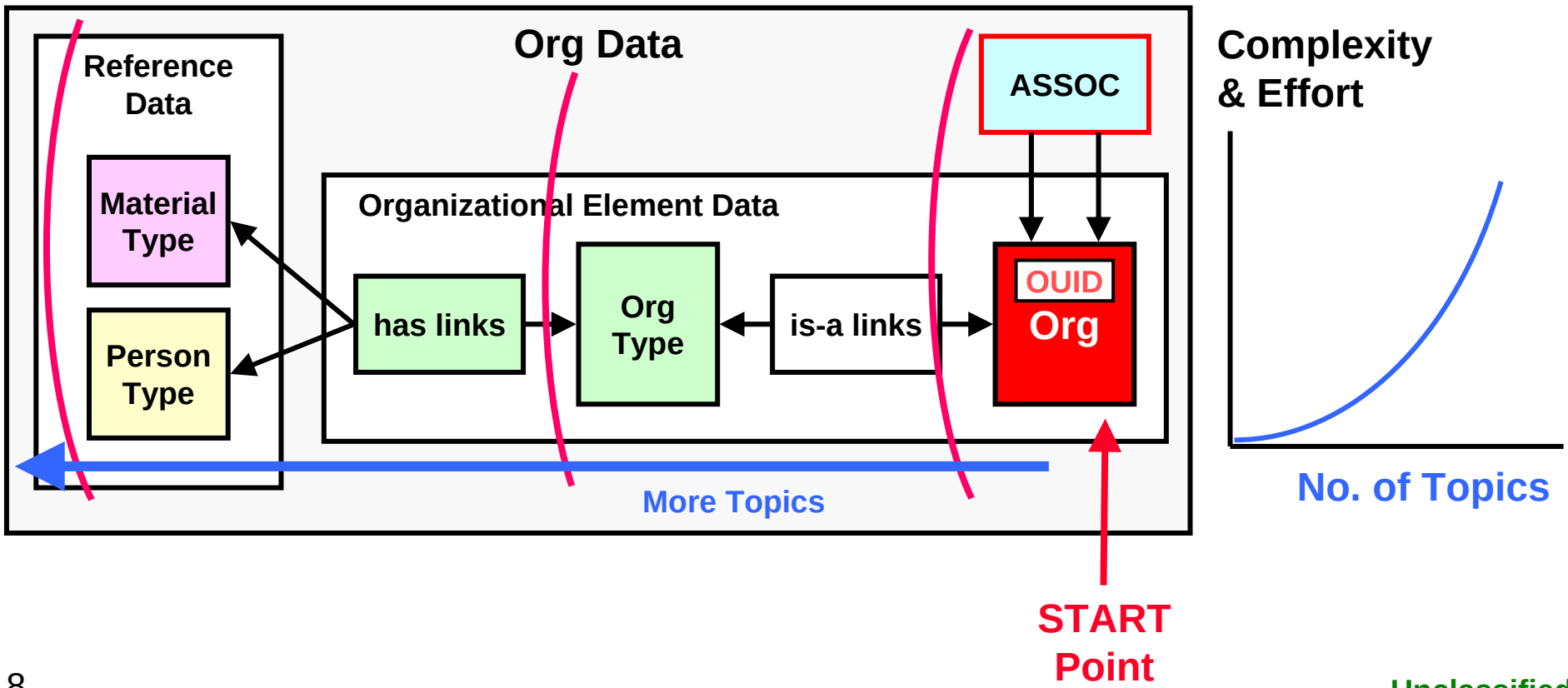

Lesson 3: The complexity of the problem increases exponentially with the scope of the data

GFM DI Provides a Contiguous, Continuous Force Structure Across the UIC Boundary

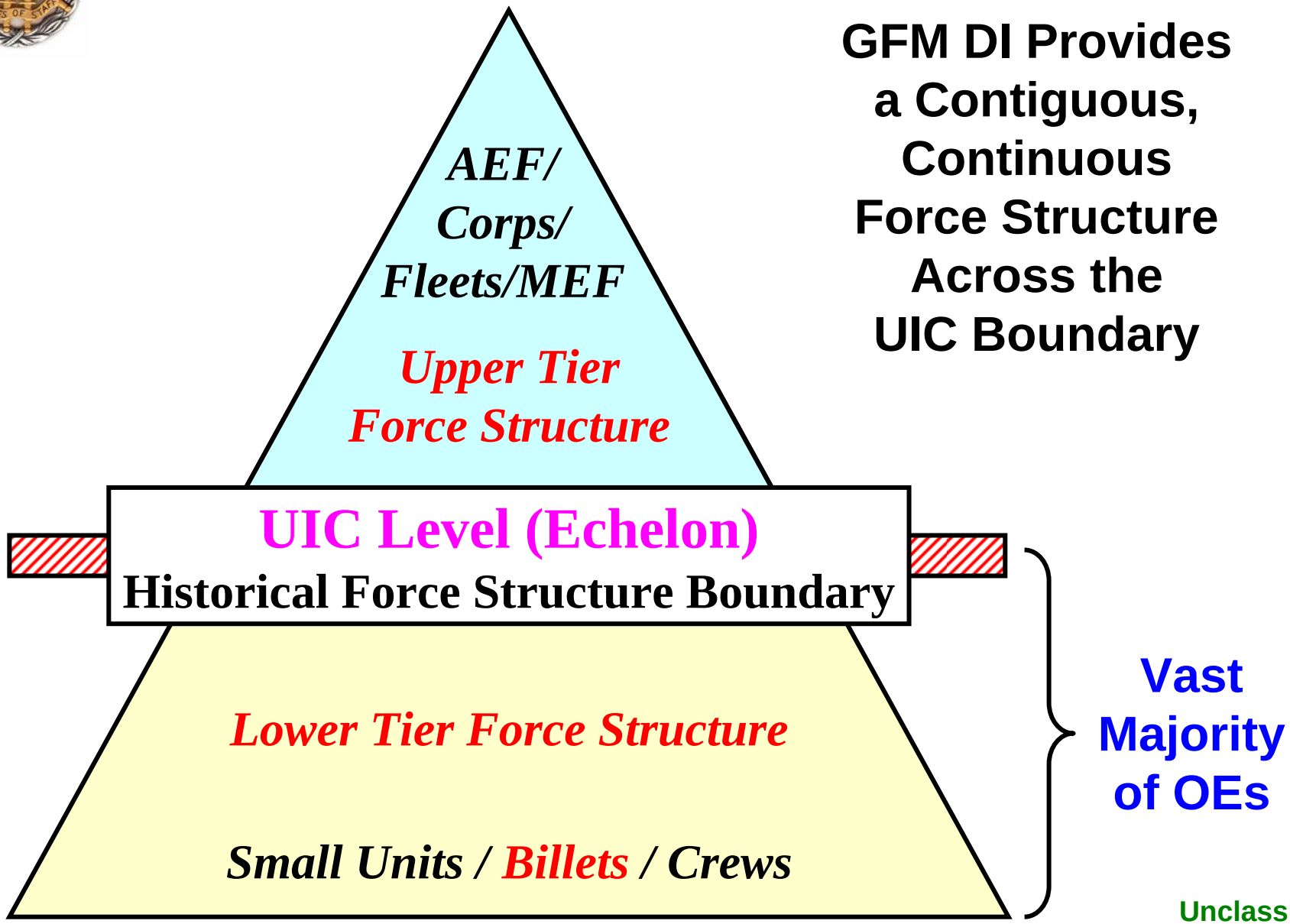

Lesson 4: It is easy to forget what the IE means in IEDM

The exchange format does not infer the internal, physical format, but …

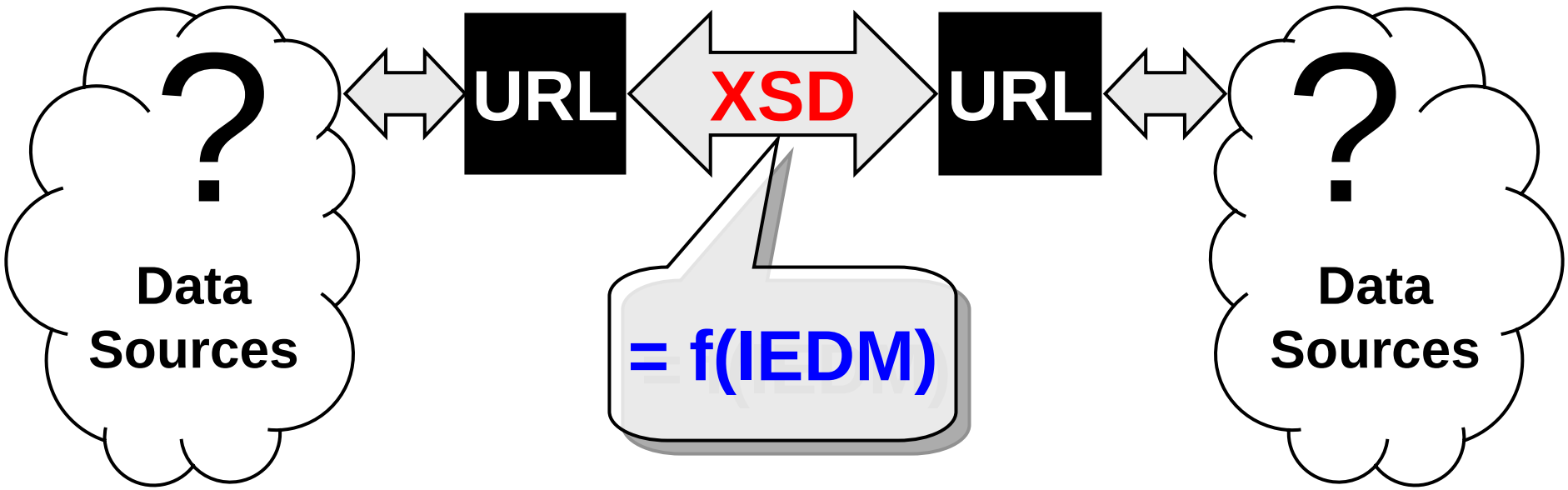

Lesson 4: It is easy to forget what the IE means in IEDM

Using a tool to create an XSD often results in the embedding of characteristics of the tool in the XSD.

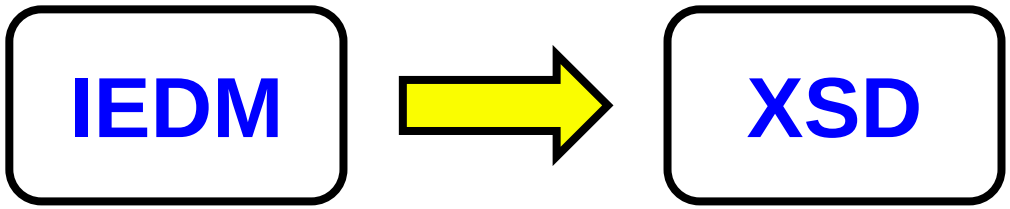

In this case, the XSD contains the characteristics of a Relational DB DM tool; that is, a relational data model, <u>broken into normalized pieces</u> each requiring an identifier (primary key).

The ease by which the XSD is implemented will vary greatly and is dependent on the native data format.

This is the core issue.

Lesson 5: Augmentation does not require modification to the original model.

Initially, modified the original model attributes. Oops.

Whenever possible, leave the existing attributes alone.

NOT:

cat_code = { ADMINS, AUGMNT, CMDCTL, … , COCOM, ISLEDB }

BUT:

cat_code = { ADMINS, AUGMNT, CMDCTL, … }
gfm_cat_code = { COCOM, ISLEDB , NOS }

Original Codes
GFM Codes

This allows the two communities to evolve relatively independently.

Lesson 6: Remove enumerated data values from of the IEDM whenever possible..

Enumerations changes → Model changes Requiring revalidated by the COI.

Move enumerated types out of the model - treat as data.

NOT:

gfm_mil_rank_code = { LTC, LtCol, Lt Col, CDR, … }

BUT:

gfm_mil_rank_code = NUMBER();

Data in a table External to the Data Model. Changing these values does not change the model.

TABLE_OF_ATTRIBUTES

id	value	owner
123	LTC	USA
456	LtCol	USMC
789	Lt Col	USAF
987	CDR	USN

Lesson 7: Identifier management remains an issue.

In this case, primarily an issue with Lesson 4:

The XSD reflects the structure of a relational database, <u>broken into normalized pieces</u> each requiring a unique identifier.

There are advantages of normalization (e.g., Security policy).

Regardless, need a common identifier policy, and in this case, an <u>enterprise-wide</u> policy.

Lesson 8: Accessibility does not obligate permission to access.

Access must be granted to be accessible.

People don't trust each other –

"How will my data be used against me?"

Requires <u>policy</u> to fix, …
and high level meetings.

Summary

Bottom Line:

If we had it to do over again –
would be choose the same approach?

Simply too early to tell.

Depends on:

- ***Strength of associated documentation.***
- ***Success of related projects (e.g., OUID Registry).***
- ***Security policy decisions.***

Complaints (pain) doesn't necessarily mean it's "bad."