Tactical Application of Game Technologies for Improved Battlespace Management

SBIR N04-231

Research and development center for submarine systems, autonomous underwater systems, and undersea offensive/defensive weapons

A software engineering and R&D firm specializing in visual solutions to complex problems in battlefield visualization, serious games applications, and visualization for cyber security.

SBIR N04-231

- What is an SBIR?
- N04-231
  - Display and Visualization of Movement Predictions for Ground Vehicles
- What is the problem to be solved?
  - Develop a capability to assist a Tomahawk weapons operator in predicting and visualizing probable future target locations

Tomahawk Background

- Block III
  - Used against high-priority, long-dwell targets
- Block IV or Tactical Tomahawk
  - Initial Operational Capability FY04
  - Additional capabilities
    - Satellite communication
    - In-flight retargeting
    - Loiter capability
    - Health and status reporting

The Problem

- **Limited capability against mobile, Time-Sensitive Targets (TST)**
  - **Weapons cannot be recalled, unlike an Unmanned Aerial Vehicle (UAV)**
  - **Short endurance limits ability to loiter**
    - **High-cost weapon**
  - **Call-For-Fire (CFF) requests**
    - **Require detailed mission planning**
    - **Response time may be significant**
  - **Lack of Situational Awareness**
  - **Need to quickly understand the battlespace**

Modeling the Real World

- Conflate data
- Visualize current situation
- Spatial relationships of objects
- Prediction - Visualize future battlefield

Why Game Technology?

- High-Performance
- Modular
- Cost Effective
- Continually improving
- Interface

Skills of Tomorrow's Warfighter

(Halo 3 beta)

Tactical Target Analysis and Prediction System (TTAPS)

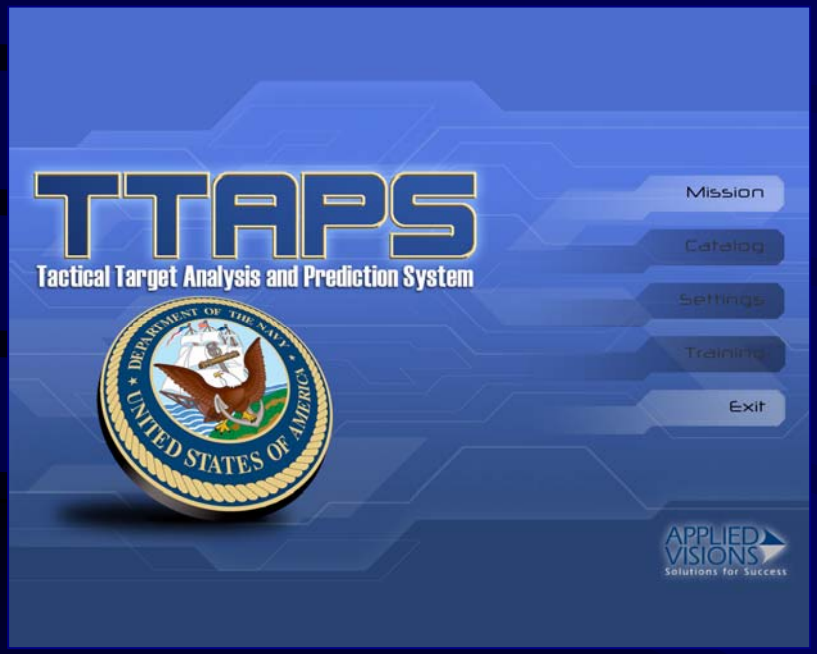

Uses gaming technologies to provide the ability to support strikes on mobile targets by Tomahawk Missiles through improved mission planning, optimized sensor (e.g., UAV) search routes, target movement prediction, and tracking of time-sensitive/mobile targets in a rapidly changing tactical environment.

Provides the ability to visualize the spatial relationships between the sensors used to detect the target, the weapon employed against the target, threats to the weapon, the movement of the target, and the battlespace itself, including terrain and weather conditions

TTAPS

- Requirements developed via Use Cases

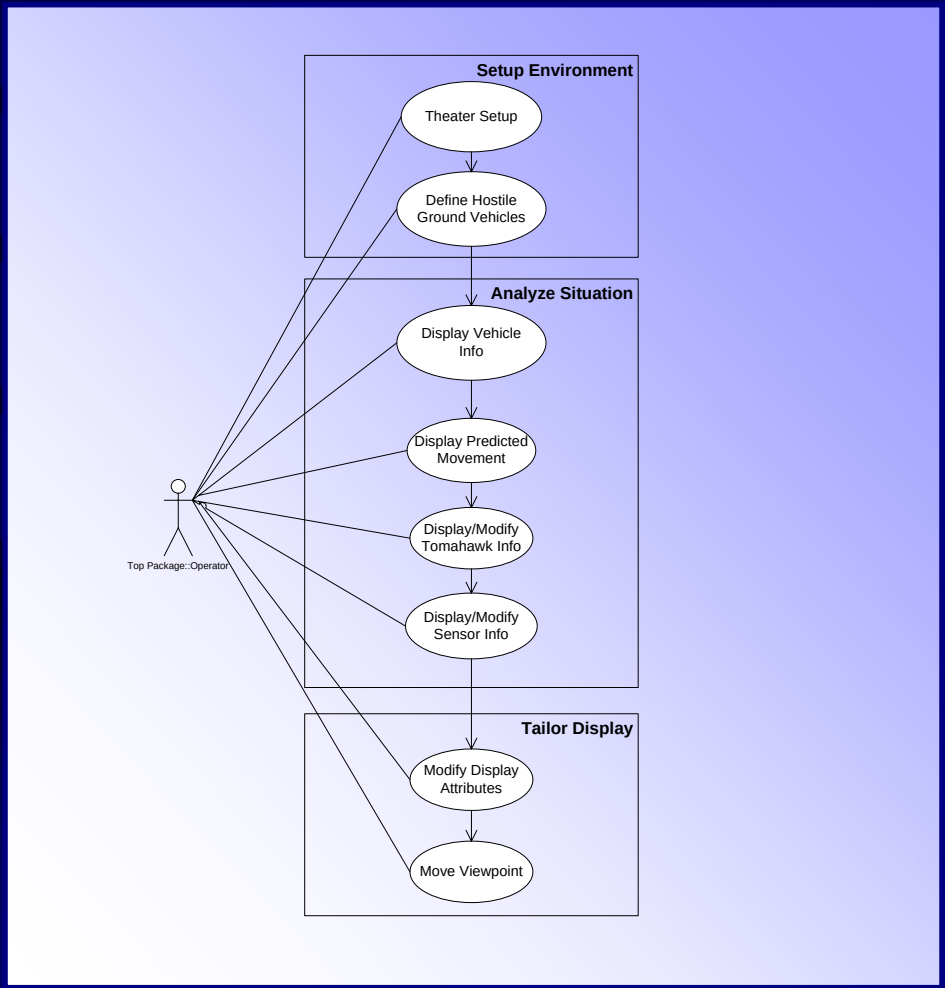

TTAPS

- Requirements developed via Use Cases

USE CASE		
1	**Theater Setup**	
	a.	Select map
	b.	Designate Hostile Facilities (aka potential Hostile Ground Vehicle Destinations)
	c.	Designate Potential Friendly Targets
	d.	Define Weather Parameters
2	**Define Hostile Ground Vehicles**	
	a.	Select Ground Vehicle (target & threat) Types
	b.	Vary Ground Vehicle Parameters
	c.	Define Ground Vehicle Locations
3	**Display Hostile Ground Vehicle Information**	
	a.	Request Ground Vehicle History Data (show prior Target position data vs. time)
	b.	Display Ground Vehicle Kill Envelope
	c.	Display Range from Hostile Ground Vehicle to Potential Friendly Targets
4	**Display Predicted Hostile Ground Vehicle Movement**	
	a.	Plot possible Hostile Ground Vehicle locations in next "n" hours
	b.	Display Probable Ground Vehicle Destinations
	c.	Display most likely routes from current Ground Vehicle position to a selected destination
	d.	Display predicted transit time from current Ground Vehicle position to a selected destination
	e.	Display choke points on a selected route
5	**Display Tomahawk Information**	
	a.	Display Tomahawk range from launch point
	b.	Display Tomahawk range from loiter pattern vs. time spent loitering
	c.	Display Time to Target from current Tomahawk position
	d.	Define new Tomahawk loiter area
	e.	Display position of Tomahawk default target
6	**Display Sensor Information**	
	a.	Display/modify Planned Sensor Search path
	b.	Display Sensor Footprint
7	**Modify Display Attributes**	
	a.	Adjust performance vs. accuracy
	b.	Filter Hostile Facility Types
	c.	Filter Hostile Ground Vehicle Types
	d.	Information Drill Down
8	**Vary Operator eye point to Assess Relationships**	

Approach

- Approach is to adapt computer game technology components as the basis for the analysis and prediction algorithms
  - Artificial Intelligence
  - Pathfinding
  - Vehicle Physics
  - 3-D Visualization
- Build upon prior "GameBridge" work with Army to adapt gaming technology to C2 systems
  - C2/JC3IEDM
  - DIS
  - **CoT**

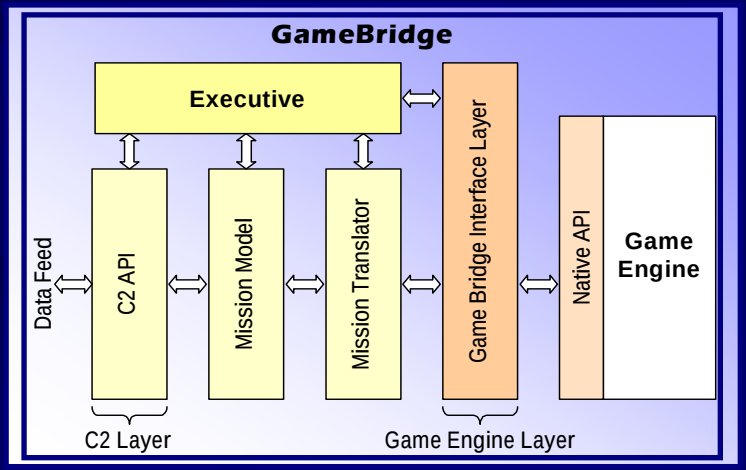

Approach (cont'd)

Typical Game Engine Architecture

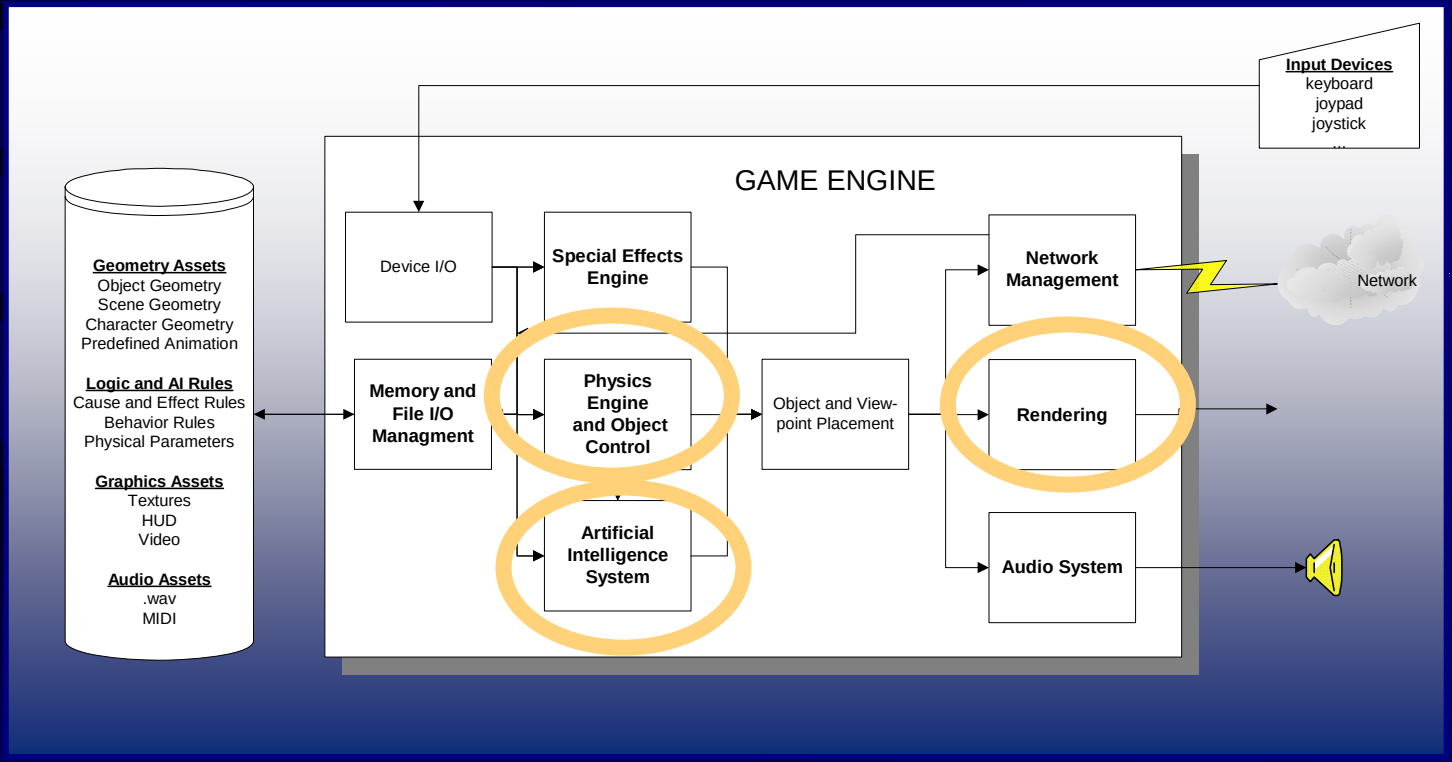

Artificial Intelligence

- Each ground vehicle considered a “thinking entity”, with:
  - Knowledge of one’s own capabilities and performance parameters
  - Knowledge of prior events (world and self history)
  - Internal status such as fuel, speed, *etc*.
  - Knowledge of current situation, including awareness of outside world acquired via sensor data
  - Decision Logic – given the current state and prior history, what action – if any – to take next

Artificial Intelligence

- AI methodology is Goal Oriented Action Planning (GOAP)
  - Used in recent games F.E.A.R. and No One Lives Forever
  - A type of AI “planning” algorithm
  - Derived from Planning Domain Definition Language (PDDL)
  - Advantages include:
    - Flexibility – multiple possible solutions to a given goal
    - Separation of data from implementation

GOAP - Actions

- Each action has one or more preconditions and effects

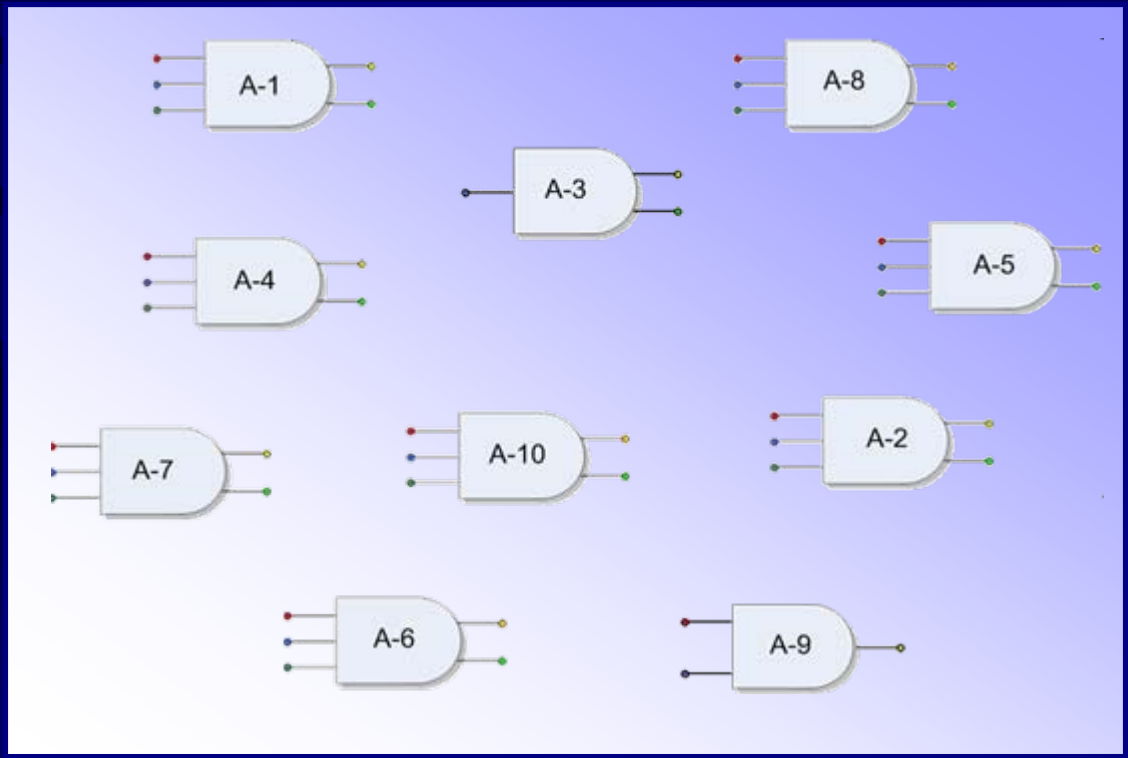

GOAP - Actions

- The current World State matches some Actions' preconditions

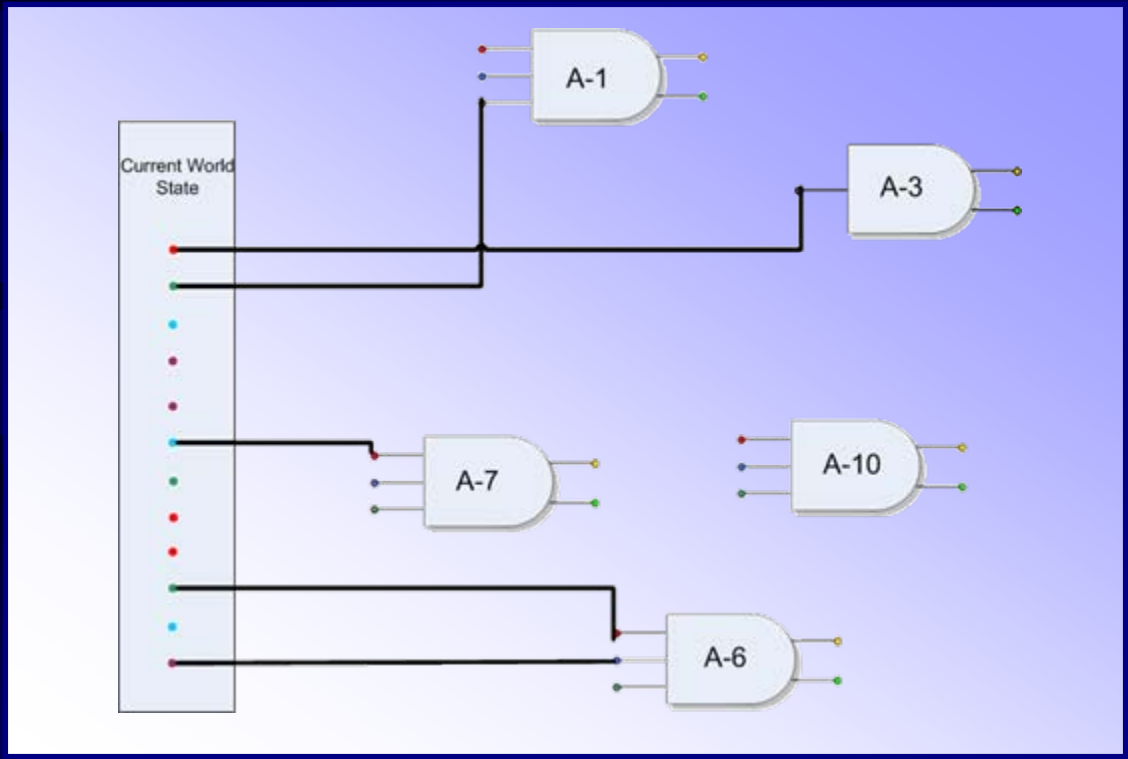

GOAP - Actions

- …and the desired World State matches some Actions' effects

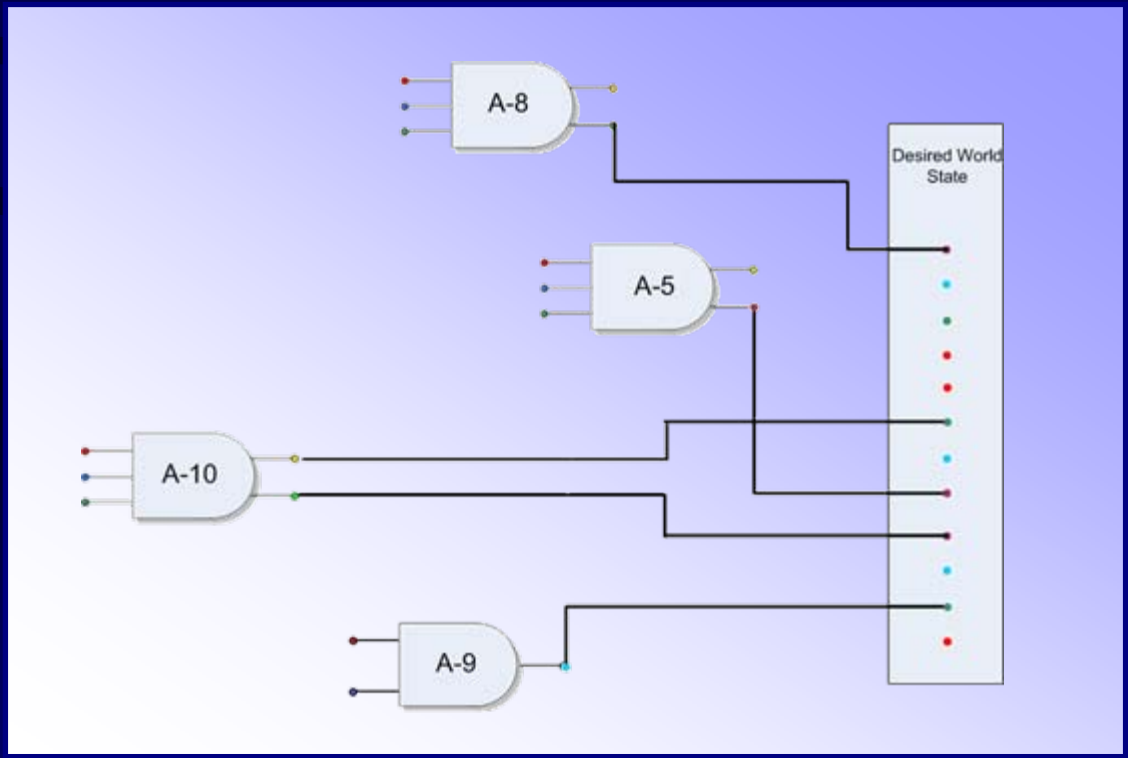

GOAP - Actions

- To reach the desired state, A* pathfinding is used to find the best sequence of Actions needed

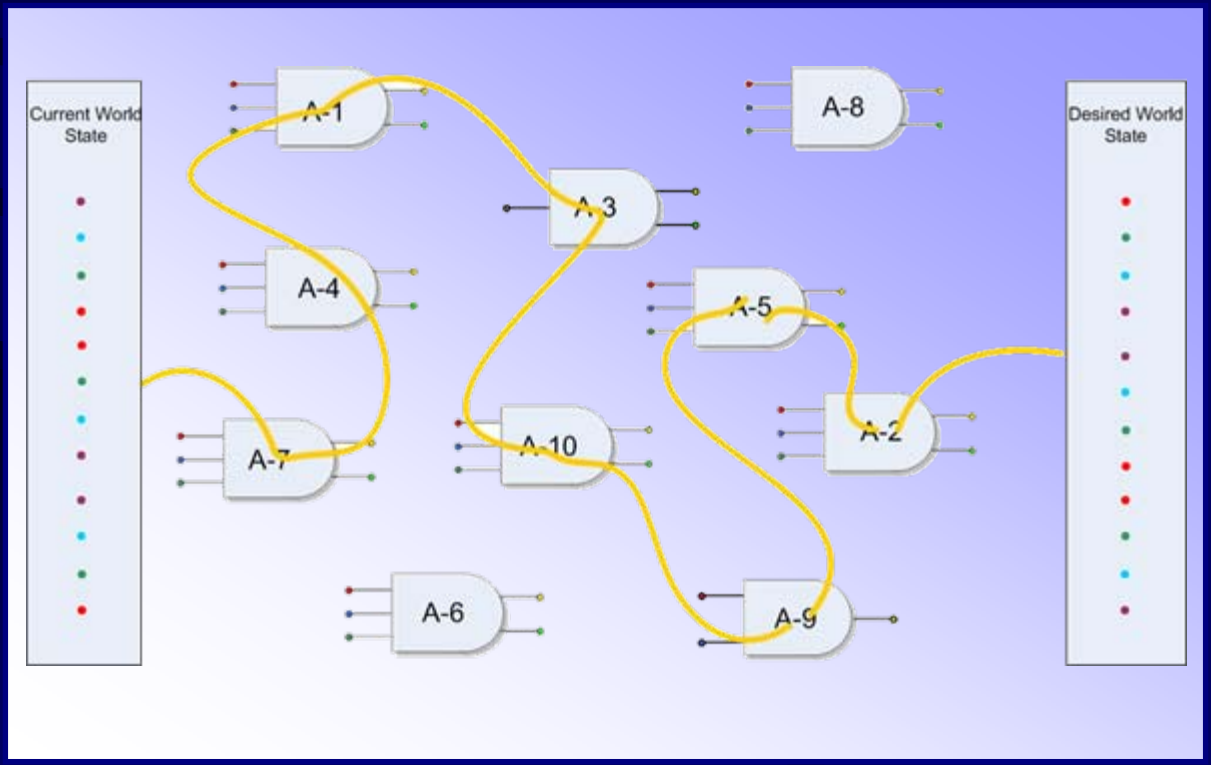

GOAP - Actions

- Actions can be assigned cost functions resulting in different “best” paths

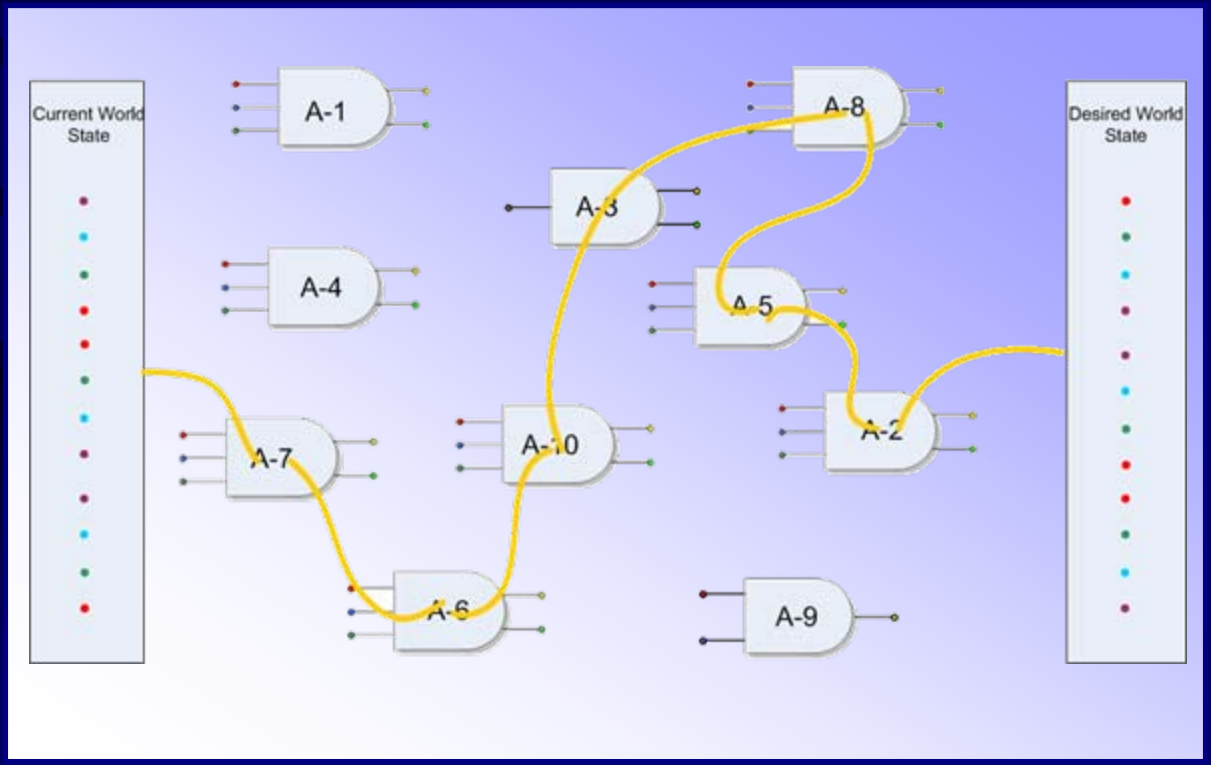

Vehicle Physics

- Implemented vehicle model using Open Dynamics Engine (ODE) included with Delta3D

- ODE performance issues
  - Speed
  - Accuracy

Pathfinding

- Once a decision is made to travel to a destination, what route(s) to take?
- Common Game problem, solved using one or more of the following algorithms:
  - Waypoint navigation
  - A* Algorithm
  - Breadth First
  - Depth First
  - Dijkstra's Algorithm
  - Ant Algorithms

TTAPS

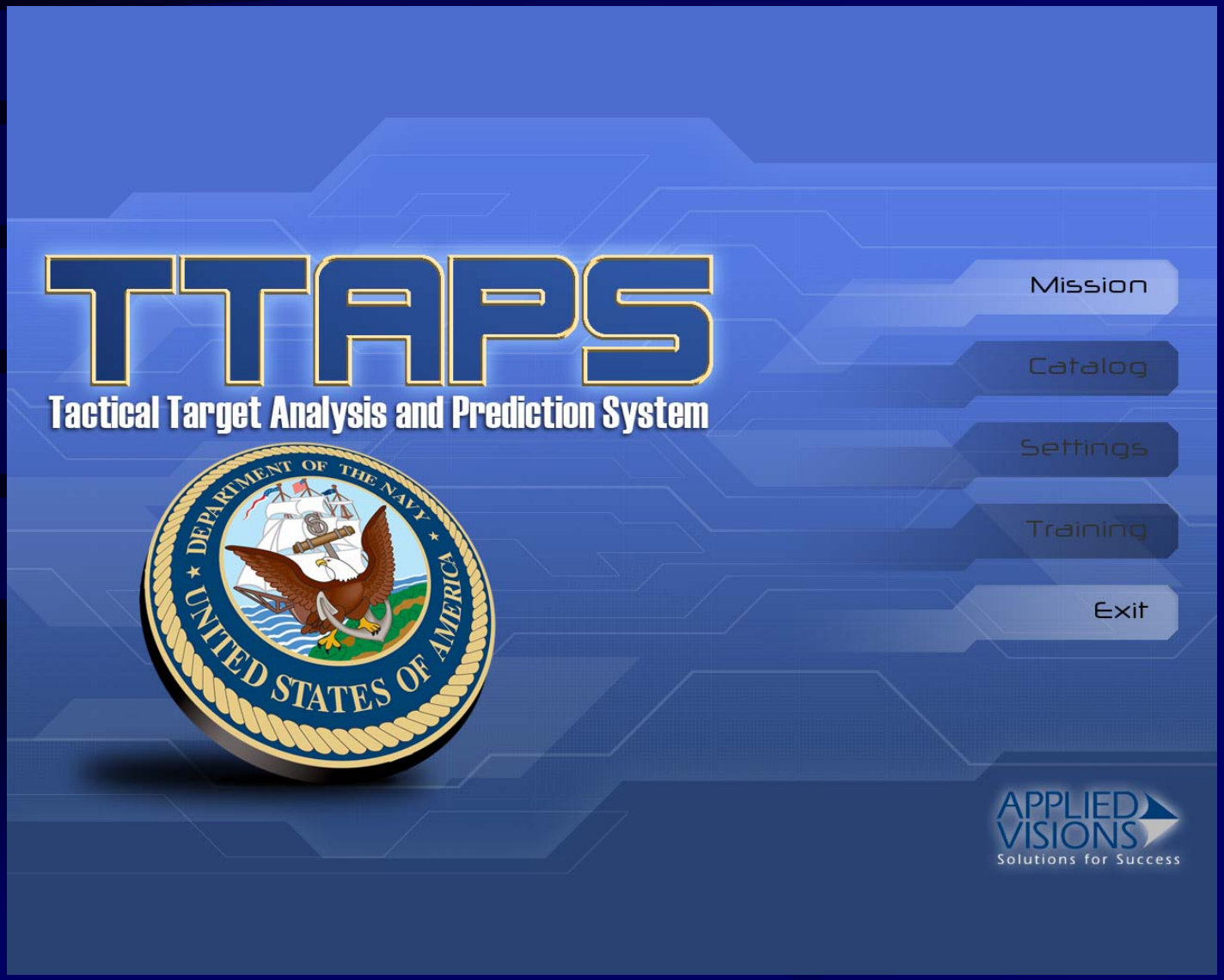
TTAPS
Tactical Target Analysis and Prediction System
DEPARTMENT OF THE NAVY
UNITED STATES OF AMERICA
Mission
Catalog
Settings
Training
Exit
APPLIED VISIONS
Solutions for Success

TTAPS

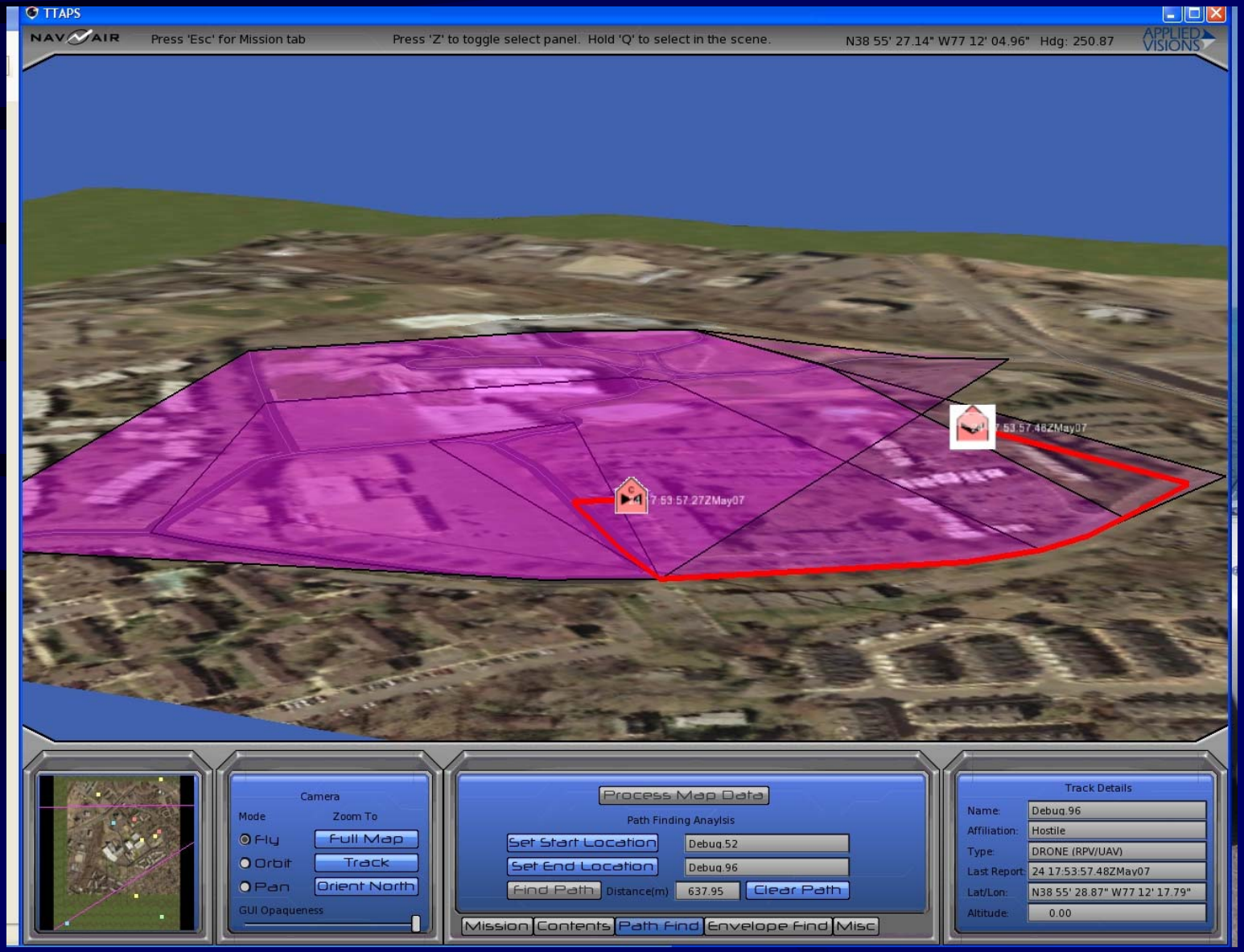
TTAPS
NAVAIR
Press 'Esc' for Mission tab
Press 'Z' to toggle select panel. Hold 'Q' to select in the scene.
N38 55' 27.14" W77 12' 04.96" Hdg: 250.87
APPLIED VISIONS
7:53:57.48ZMay07
7:53:57.27ZMay07
Camera
Mode
Zoom To
Fly
Full Map
Orbit
Track
Pan
Orient North
GUI Opaqueness
Process Map Data
Path Finding Anaylsis
Set Start Location
Debug.52
Set End Location
Debug.96
Find Path
Distance(m)
637.95
Clear Path
Mission
Contents
Path Find
Envelope Find
Misc
Track Details
Name:
Debug.96
Affiliation:
Hostile
Type:
DRONE (RPV/UAV)
Last Report:
24 17:53:57.48ZMay07
Lat/Lon:
N38 55' 28.87" W77 12' 17.79"
Altitude:
0.00

TTAPS

TTAPS
NAVAIR
Press 'Esc' for Mission tab
Press 'Z' to toggle select panel. Hold 'Q' to select in the scene.
APPLIED VISIONS
Maps
Entities
Representations
Text
Mission
Camera
Filtering
Cursor-on-Target

TTAPS Capability

- Combined with other capabilities to provide complete solution
- Tomahawk is a high cost missile
- Targets must have high-value

TTAPS Milestones

- Phase 1 – FY05
  - Developed approach and demonstrated feasibility of approach
- Phase 2 – FY06/07
  - Currently in 2nd Year of funding
- SIMEX 07-2 LSRS/NSW
  - TTAPS application proved valuable especially in providing an understanding of the battlespace during periods of lost situational awareness

Future Work

- FY 2008
  - SIMEX 08-1 & 08-3
  - Continue to mature TTAPS
    - Identify other interested programs
    - Leverage SBIR matching funds
  - Identification of opportunities for Joint Fires participation
- FY 2009
  - Participate in Joint Fires battle experiments
  - Integration with Military Strike Applications
- FY 2010
  - Fleet trials
- FY 2011
- FY 2012
  - Integration with Navy WCS Applications

Points of Contact

David A. Silvia
Naval Undersea Warfare Center (NUWC)
Bldg. 1171 Code 2511
Newport, RI 02841
401-832-2869

silviada@npt.nuwc.navy.mil

Ken Doris
Applied Visions, Inc.
Northport, NY 11768
631-754-4920 x120

kend@avi.com