Approved for Public Release. Distribution Unlimited. #07-0546

12th ICCRTS
"Adapting C2 to the 21st Century"

Real Options and Flexibility Approach to Systems Engineering Enterprise Wide Satellite Communications

Topics
Networks & Networking
Cognitive Social Issues
Organizational Issues

John W. Dahlgren

The MITRE Corporation
903 Gateway Blvd, Suite 200
Hampton, Va 23666
757-825-8529
Dahlgren@mitre.org

©2007 The MITRE Corporation. All Rights Reserved.

Abstract

Satellite communications have become a significant form of communications for government agencies. While traditional systems engineering (TSE) has served the satellite developers and terminal developers, this has often been focused on determining the requirements for that constellation, and then separately determining the requirements for each terminal. The incorporation of Real Options and Flexibility concepts, combined with Enterprise Systems Engineering (ESE) paradigms, provides the opportunity to add significant value to the using community while not impacting the budget to any great extent. This paper will evaluate the concept of satellite communications from the standpoint of a group of satellite systems and terminals being procured by a single agency that would be responsible for the total capability for a 30 year timeperiod. This paper will remove the concept of each capability being bought by individual programs, and will introduce the concept of measuring initial utility and utility over rolling time periods to ensure progress is being made. This paper will also introduce the concepts of inserting RO from a bottom up approach for each subsystem (satellite and terminal), and from a top down approach across the total enterprise of constellations and terminals.

Introduction

The United States has made excellent use of satellite communications for many decades. As user requirements have changed, so have the types of satellites that are launched and the subsequent terminals that must use those satellites. As satellite communications is becoming ubiquitous, the potential for the merger of capabilities between satellite constellations and terminals (ground and airborne) exists, and will likely save users significant investment funds. On the other hand, a focus on too much flexibility in a single satellite or terminal may ultimately ensure that the system does nothing well. This paper will look at ways to add Real Options (RO) and flexibility at the satellite and terminal level, as well as across the constellation. The paper will also review possible investment techniques for choosing the RO in which to invest, and how a common risk management technique can be adjusted to help identify the best opportunities for inserting RO. No detailed capabilities will be mentioned in the effort to ensure this paper remains unclassified and can be approved for public release. The concepts provided can be applied to a variety of systems in both the public and private sectors.

Real Options Explained

The concept of RO (RO) is a natural extension of the use of options for financial systems. An option is a right that an investor can purchase to provide the opportunity to purchase a significant amount of some commodity at a future date. For instance, an investor may purchase options on 100 barrels of oil at $2/option with a strike price of $65/barrel within a given time period of 3 months. The investor would have paid $200.00 for the right, but not the obligation, to purchase those 100 barrels of oil at a later date. Of course the investor would only exercise the option if the price of oil rose above $65/barrel, since otherwise it would be less expensive to purchase the oil on the spot market. A next step in options investing included when people bought options on parcels of real estate. These

©2007 The MITRE Corporation. All Rights Reserved.

options were generally a price paid to have a right of refusal on purchasing the real estate at a given cost, within a stated time period. The concept of RO is relatively new and relates to designing options into a system. For instance, a common example used by Professor Richard de Neufville of MIT is that of building a parking garage in such a manner that additional floors can be added at a later date if the demand demonstrates the financial viability of such an investment (de Neufville, 2005). This is in contrast to building the parking garage to meet only the current demand. The difference in costs for these two designs represents the cost of the option. Another design choice is to build the garage to accommodate the demand that is projected 10 years out. This choice could lead the owners to invest a significant amount of money on a system capacity that might not be used for many years, if at all. The use of RO provides the owners the chance to save money in the initial system development and to expand the capacity as requirements, in this case system demand, becomes clearer. A key difference with a RO as opposed to the financial instruments is that the RO does not have an expiration date, and thus can be exercised at any time.

The RO thought processes often focused on the hardware aspects of the systems. In this way RO was closely related to TSE in that the options were related to a single system. Recent thoughts have extended the uses of RO to include systems, processes, and the people who use any/all of them. There may also be some overlap between how an option impacts the people, processes and systems. For instance, a satellite may be designed with additional fuel capacity as a way to purchase an option on additional orbital maneuvers. This option may ripple through the way users align the constellation over many years according to increased demand in a given geographic area.

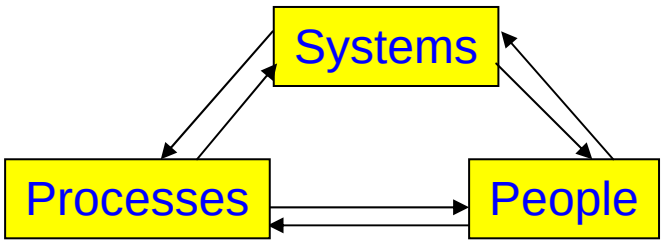

Figure 1. RO Impact Areas

RO and System Design

The concept of inserting RO into a system from a Traditional Systems Engineering standpoint first requires the ability to decompose the system into components. This decomposition allows the designers identify areas for possible standardization, and also areas for possible overdesign of components to enable future system evolution. A possible method to perform this decomposition is the Design Structure Matrix (DSM).

©2007 The MITRE Corporation. All Rights Reserved.

A Design Structure Matrix (DSM) is a matrix that depicts the relationships among the components in a system (DSM Web Site 2006). Systems engineers use DSMs to illustrate relationships among subsystems. The relationships tracked by a DSM are directional. Thus the relationship of component A to component B is distinct from the relationship of component B to component A.

This study employs DSMs to articulate how changes made to components affect other components in a system. The relationships in the DSMs indicate whether a given component will require modification if another specified component is upgraded. These relationships are stated as dependencies. Figure 2 shows the three possible types of dependency relationships.

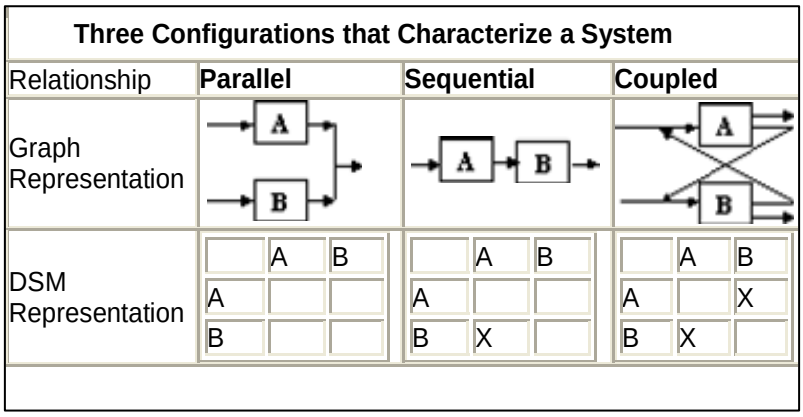

Figure 2. DSM Component Relationships (DSM Web Site 2006)

In the first relationship depicted in the figure, changes to the system components do not interact with one another. Thus component B is independent of component A (and vice versa) with regard to modifications. Upgrades to either component can be made independently. In the sequential (also known as dependent) relationship, changes to one component require modifications to another component in order to maintain a working system. The figure depicts that component B is dependent upon component A. Thus, if component A is upgraded, then component B will require modifications to keep the system operational. Finally, in the coupled relationship, components A and B are interdependent and therefore coupled.

Figure 3 depicts a DSM for a generalized connectivity between a satellite terminal to satellite to satellite terminal. While some users of DSMs insert a “1” or an “X” in the boxes to indicate a relationship between two subsystems, this author has chosen to use an “H” to indicate a high degree of coupling, a “M” to indicate a medium degree of coupling, and a “L” to indicate a low degree of coupling. Each of this linkages, or couples, indicates an increased level of complexity since each relationship will impact the initial design and any efforts to upgrade one of the subsystems as that will also impact the other subsystem as well. Tight couples between subsystems can lead to customized design rules between each of the subsystems, and thus make the total system very tightly coupled and very difficult to design, maintain and upgrade.

©2007 The MITRE Corporation. All Rights Reserved.

		1	2	3	4	5	6	7	8	9
Baseband -- User 1	1		L	H						H
Input Port -- User 1	2			H						
Terminal -- User 1	3	H	H		M	H	L			
Uplink Channel -- User 1	4			H		H	M			
Satellite Communications Payload	5			M	L		L			
Downlink Channel -- User 2	6			M	M	H				
Terminal -- User 2	7			H	L	H	M		H	H
Output Port -- User 2	8							H		
Baseband -- User 2	9	H		M				H	L	

Figure 3. Generalized Satellite Terminal – Satellite – Terminal DSM

Even with a low level of detail, Figure 3 shows where some items are linked and others clearly are not coupled. Figure 4 provides a medium detailed DSM. The highly detailed DSM consists of an 83 X 83 matrix and becomes too difficult to read on a single page. These tools enable designers to identify the need for a close linkage between the satellite and each terminal. For instance, the modulation and coding mechanisms for each terminal and the satellite must be interoperable to ensure connectivity. Any changes in one system must match changes in the systems. In a lesser coupled manner, the interleavers between each terminal must be interoperable, but changes here do not impact the satellite. The least coupled subsystems are the antennas. The antennas are coupled in a manner to deal with the type of polarization and to support various link margins and data rates. The terminals changing their antenna size won't directly impact the other terminal or the satellite's antennas. The DSMs help to identify not only the areas for coupling but also the possible areas for overdesign of a subsystem. Such overdesign in the satellite or either terminal would relate to software, processing power and memory components that can support changes to the modulation and coding subsystems. Many satellite systems last at least 10 years and sometimes longer, therefore overdesigning some subsystems on the satellite can provide RO to exercise if improved modulation and coding subsystems are developed after the satellite has been launched. While the satellite terminals can be upgraded much easier than the satellite, often the terminals are not designed to include these types of RO to facilitate easy upgrades. A not uncommon practice is to insist that the initial satellite terminal design allows for using not more than 50% of the available memory and processing power. Unfortunately there is no study, at least that this author can find, that provides technical reasoning behind this 50% factor as opposed to 100% or even 1000%. This author would contend that in this era of inexpensive memory and processing power, the satellite and the terminals should include all of the memory and processing power the system can handle. A recent RO being included in some satellite systems is digital channelization. This capability enables satellite operators to change the bandwidth of a given channel between a variety of choices to best meet dynamically changing user requirements.

Satellite terminals can have other RO included in their design. The user community may need to procure separate terminals for airborne and ground users, as well as different

©2007 The MITRE Corporation. All Rights Reserved.

types of ground terminals depending on the users' required data rates and mobility needs. A common operating system, software applications, and Human Machine Interface (HMI) between all of these terminal types can provide multiple RO to be exercised across terminal types. Developing a common operating system and software subsystems provides options to have a single company develop and install software upgrades across many types of terminals, saving significant investment funds. This common software also should make it easier to synchronize installations across multiple platforms since the software should have been developed, tested, and ready for implementation at the same time. A key option enabled by using common software is to develop an upgrade process that might allow users the choice of not implementing every software upgrade, but instead skipping some upgrades to save investment dollars and decrease evolutionary complexity.

A common operating system will most likely mean a common HMI. A common HMI will enable the same people to operate multiple terminals, all while also minimizing the training requirement for these people. A common HMI can be used to simplify terminal operations, and thus open up this task to a greater number of people. Efforts that simplify the operations of equipment enable a RO on a greater number of people being able to perform the task and thus raise the overall potential capability of the organization. Designing the HMI to closely resemble other commonly used operating systems will further facilitate increased potential capability of the organization. While this author supports commonality in many areas, readers are cautioned to not force commonality to the point of significantly decreasing capability. As in many areas, a trade-off analysis should be performed.

Another are for RO implementation includes common technical interfaces between subsystems. Common interfaces enable RO for upgrading systems as such upgrades become available. Common technical interfaces also enable RO for systems engineers to utilize the research and development efforts of a variety of vendors. This variety of choices can instigate competition between vendors and thus provide greater capability to consumers that likely would not exist in a system that is dominated by a monopoly. While many of us think of monopolies from a macro-economics perspective, a small version of a monopoly exists whenever consumers are locked into proprietary solutions and thus vendors can produce systems upgrades at their leisure instead of at the more frequent pace that often results from a competitive environment.

RO that support the combined upgrades of satellites and terminals have the greatest potential to improve usable capability. While satellites are often viewed as a single system and terminals as another system, there is value in viewing both of them together as a system that provides a capability. As previously discussed, changes to items like the modulation and coding subsystem on the terminals or satellite cannot be changed without impacting the other. Ideally both the satellite and the terminal should be designed with the goal of upgrading key subsystems in both major systems. This should ultimately enable a synchronized development and fielding of upgrades. Similarly, RO should be considered across multiple types of satellites and terminals. While a satellite system may have been developed to provide a specific capability in support of a specific mission,

©2007 The MITRE Corporation. All Rights Reserved.

nothing precludes that system from supporting other missions as well. Note the previous statement does not imply that every satellite system should include every capability. Instead users should view the constellations of satellite systems as providing the totality of capability, and each satellite system should provide both a primary and secondary capability to ensure the long-term flexibility of the total constellation to meet evolving user needs.

©2007 The MITRE Corporation. All Rights Reserved.

	Baseband -- User 1	Input Port -- User 1	Terminal -- User 1	Encoder -- Terminal 1	Interleaver -- Terminal 1	Modulator -- Terminal 1	Uplink Channel -- User 1	Antenna -- Terminal 1	Satellite Receive Antenna	Satellite Demodulator	Satellite Communications Payloa	Satellite Modulator	Satellite Transmit Antenna	Antenna -- User 2	Downlink Channel -- User 2	Demodulator -- Terminal 2	De-Interleaver -- Terminal 2	Decoder -- Terminal 2	Terminal -- User 2	Output Port -- User 2	Baseband -- User 2
Baseband -- User 1		L	H																		H
Input Port -- User 1			H																		
Terminal -- User 1	H	H					M				H				L						
Encoder -- Terminal 1										M								H			
Interleaver -- Terminal 1																	H				
Modulator -- Terminal 1				M						H						M					
Uplink Channel -- User 1			H	H	L						H				M						
Antenna -- Terminal 1									M				L	M							
Satellite Receive Antenna								M													
Satellite Demodulator				L		M															
Satellite Communications Payload			M				L								L						
Satellite Modulator																H					
Satellite Transmit Antenna									L			L									
Antenna -- Terminal 2								L	L				H								
Downlink Channel -- User 2			M				M				H						L	M			
Demodulator -- Terminal 2				L								H									
De-Interleaver -- Terminal 2					H																
Decoder -- Terminal 2				H								L									
Terminal -- User 2			H				L				H				M					H	H
Output Port -- User 2																			H		
Baseband -- User 2	H		M																H	L	

Figure 4. Medium Detail Terminal to Satellite to Terminal Connectivity

©2007 The MITRE Corporation. All Rights Reserved.

Identifying RO in Systems and Constellations

The process of identifying RO in systems is not always easy. Earlier in this paper the author discussed using the DSM to identify areas for overdesign. There are additional steps to provide a more robust systems engineering solution to identifying the RO. The theory and practice of Risk Management has often used the concept of identifying all of the major risks, and then rating each risk by probability and impact. The combination of probability and impact are necessary to identify the highest risk items. On the other hand, some risks may have a high impact but a very low probability, or a very low impact but a high probability, and those risks normally do not meet the criteria of instigating significant mitigation activities.

RO identification can follow a similar thought process by substituting the concept of opportunity for risk. The key step is to identify those areas where technology change has a high probability of success and a high impact to increase system capabilities. Figure 5 depicts a new manner to look at opportunities. Whereas the risk management paradigm colors the blocks in the upper right hand corner red to depict a very high probability and impact of risks with those ratings, this opportunity management paradigm makes those blocks green since they will have the highest probability of happening and the highest impact if the technologies that facilitate those RO do materialize. Identifying the most likely technology improvements will include using forecasts from independent companies, working with government laboratories, performing a survey of the Internal Research and Development (IRaD) activities of private companies that develop the terminals and satellites, and initiating technology development efforts in given areas with the government laboratories.

Figure 6 depicts the concept of Technology Readiness Levels (TRL) to relate a numeric rating to technology maturity. The Department of Defense (DoD) often focuses on a TRL of 6 or higher to indicate a technology that has reached a level of maturity where the risk of relying on that technology for inclusion into a new system is relatively low. Figures 5 and 6 can be used in unison in an attempt increase the accuracy of the probability of technologies actually providing an impact. For instance as shown in Figure 5, TRLs of 1 and 2 could be related to “Unlikely”; TRLs 3 and 4 could relate to “Somewhat Unlikely”; TRLs 5 and 6 could relate to “About Even”; TRLs 7 and 8 could relate to “Somewhat Likely”; and finally TRL 9 could relate to “Very Likely”. While this isn’t an exact calculation or prediction, the use of an established mechanism such as TRLs should improve the probability rating.

Designers and Systems Engineers should use TRLs to identify the areas most likely to change (hot spots) and the areas unlikely to change but are needed to facilitate these changes (cold spots), and then action is taken to design in the RO to support future spiral development. Jason Bartolomei, a PhD student at MIT ESD, is developing the concept of hot and cold spots (Bartolomei, 2006). Readers are encouraged to search the MIT web site for Jason Bartolomei’s papers and upcoming dissertation related to hot and cold spot analysis.

©2007 The MITRE Corporation. All Rights Reserved.

		Positive Impact of inserting a new technology and Exercising a RO				
		Negligible	Minor	Moderate	Serious	Critical
P O f T e c h A d v a n c e	Very Likely (VL) 81-100%	Low	Medium	High	High	High
	Somewhat Likely (SL) 61-80%	Low	Medium	Medium	High	High
	About Even (AE) 41-60%	Low	Low	Medium	Medium	High
	Somewhat Unlikely (SU) 21-40%	Low	Low	Medium	Medium	Medium
	Very Unlikely (VU) 0-20%	Low	Low	Low	Low	Medium
		Opportunity Rating:	Low (L)	Medium	High (H)	

Figure 5. RO Opportunity Chart

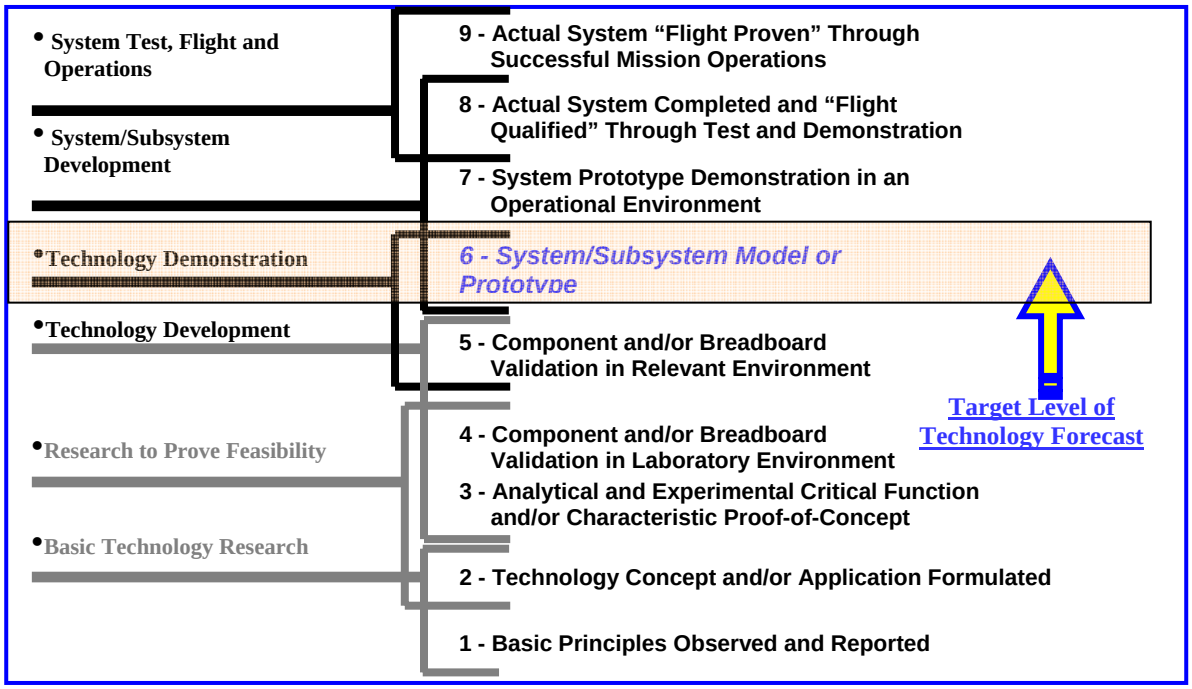

Figure 6. Technology Maturity, or Technology Readiness Levels (TRL)

RO can be applied to an individual satellite, constellations of satellites, a mix of constellations, as well as including commercial satellite capabilities. RO within a constellation can include subsystems that help that specific constellation to react to changing user needs. Commonly a satellite is launched with extra fuel to facilitate orbital

©2007 The MITRE Corporation. All Rights Reserved.

maneuvers. This extra fuel provides options for moving the satellite to support geographic areas with the greatest mission impact or profitability. The extra fuel can be a RO on the flexibility of the individual satellite and the flexibility of the constellation.

Within a single constellation or a group of constellations, a significant RO is the ability to launch new satellites with increased capability into the needed orbital locations. Having a reliable and inexpensive launch capability means that satellites can be designed to support a lower life expectancy. This provides a balance of designing RO into the satellite itself and enabling a constellation upgrade as user requirements become better known or as technology development reaches a higher TRL. While software improvement can enable upgrades to facilitate the incorporation of improved modulation, coding, and encryption schemes, there are limits to increased data rates without making improvements to the satellites' antenna systems.

The total SATCOM capability can also be improved by viewing the composite of the constellations as the total capability provided to the user community. In this way the provider can look at all possible solutions in an area such as slow throughput narrowband communications systems to meet the overall user community's needs. In a similar manner, any satellite system that provides high throughput capability can support the mix of users requiring a high throughput. In this way the providers of SATCOM throughput can view the mix of satellite constellation capabilities, even those in different frequency bands, and the mix of user terminal capabilities to provide a composite capability.

Commercial SATCOM offers an additional capability to support user needs. While the military has previously thought of commercial SATCOM as augmenting military systems, the current reality is that commercial SATCOM supports 80% of the military's needs and military systems support only the remaining 20%. It appears that military systems augment commercial capability by supporting the most mobile users. To exercise the RO of Commercial SATCOM will require the user community to either purchase terminals that support a multitude of frequency bands, or procure multiple types of terminals. The first step is likely to procure terminals that support military and commercial frequencies in the same frequency band and similar frequency bands. Looking back at the traditional systems engineering analysis of a satellite terminal (see figures 2 & 3) reveals that inserting too many capabilities within a single terminal may cause interdependencies that inhibit terminal performance. Such factors could include causing problems with processor and memory usage, power consumption, and heat dissipation.

Teaming with Commercial SATCOM providers may offer additional options not previously envisioned. For instance, commercial satellites that have not maximized the use of every size, weight and power factor may offer the chance to use these satellites to augment a military capability and to perform experiments with new technologies. INTELSAT Corporation briefed just such a concept at the DOD Commercial SATCOM Users Work Shop in December 2006 (Sears, 2006). Their concept related to putting an IP Router In Space (IRIS), which will be an experimental package to be included on an already planned commercial satellite. IRIS will use extra capacity that already exists on the satellite to enable government users to experiment with an IP router on a satellite,

©2007 The MITRE Corporation. All Rights Reserved.

enabling them to determine the technical challenges and the operational benefits. This allows the government to experiment with new capabilities and resolve related technical issues before incorporating these technologies into operational satellites. This type of teaming between government and commercial SATCOM providers introduces a new variety of collaboration. The government often has the most demanding operational requirements and builds satellites to meet those needs. Commercial SATCOM providers have been able to rely on this process to mature technologies via government funded research & development efforts. The teaming of the government with the commercial SATCOM providers means that the commercial providers are now providing the platform for the experimentation and testing of technologies they may introduce on their commercial satellites in the future.

All of the above mentioned RO can be rated according to the chart presented in Figure 5. This chart offers the chance to evaluate RO within a given area, such as a single satellite or constellation, between a type of satellite and the using terminals, and across the mix of constellation types. As previously stated the predictability of the options with the highest probability-impact score won't be perfect, which leads to including an investment methodology that helps to minimize that risk.

Investing in RO

Often RO investment techniques have involved determining items such as net present value and discounted cash flow. Unfortunately these methods rely on accurately predicting the discount rate to apply in the formula. This author contends that such a prediction, especially over a long time period, will prove to be inaccurate no matter how precise the use of computers can make the calculations. An alternative method for investing in RO might be to apply the investment principles originally developed by Benjamin Graham and David Dodd in the 1930s, and documented in the books *The Intelligent Investor* (Graham, 1973) and *Security Analysis* (Cottle, et al, 1988). Graham and Dodd founded the area of Value Investing, which focuses on purchasing a security significantly below its intrinsic value. They also believed in purchasing a basket of securities and not investing a large percentage of available funds into a single security. Many of their students have utilized Value Investing to become some of the most successful investors in the world over the past 50 years. Their most famous student is Warren Buffett, currently the second wealthiest person in the world, who gained all of his wealth through investing in securities or purchasing large portions of or entire companies.

Some explanation of concepts is required before proceeding with applying the concept of Value Investing to investing in RO for technical systems. Graham believed that a method was needed to evaluate different types of investments – stocks, bonds, etc. – to enable investors to make informed comparisons of their possible gain (Hagestrom, 1994). One key concept was "Margin of Safety". Graham believed that if a company's income was significantly greater than its expenses, then a Margin of Safety existed for investors purchasing that company's bonds. In this case bonds are used as the example because an investor purchases bonds primarily for the interest income, as promised by the company in the advertised yield, and to have the full investment returned upon the bond reaching

©2007 The MITRE Corporation. All Rights Reserved.

maturity. Determining the intrinsic value for stocks proved more difficult. Graham felt that determining the intrinsic value could depend on items such as future earnings, expenses, sales volume, etc. that are difficult to predict. After some time Graham determined that the intrinsic value of a company, and therefore the portion of a company that a share of a stock represents, relies not only on the stock's book value (assets minus liabilities) but also a conservative estimate of future earnings (Hagerstrom, 1994). Graham believed the power of determining an intrinsic value was not in the precise calculation but in the ability to compare investments. Graham felt that security analysis included quantitative factors such as earnings and book value, and also qualitative factors. Such qualitative factors included the nature or long-term viability of the business, and the capability of management. Graham's goal was to purchase stocks at a low intrinsic value as compared to price, thereby producing a Margin of Safety.

Another paradigm that produces a Margin of Safety is the ability to diversify investments. Graham's students varied in how they diversified their own investments. As Warren Buffett describes in Appendix 1 of *The Intelligent Investor*, some of Graham's students bought only a few stocks whereas others purchased stocks of over 100 companies (Graham, 1973). These students also purchased stocks from a variety of industries, all dependent on their determinations of the intrinsic value of the security compared to the market price at the time of purchase. While they could not accurately predict their return on investment, the history of this investment philosophy showed they would have very positive results. Results over a 20-30 year timeperiod (depending on the investor reviewed) showed their investment vehicles (often limited partnerships) outpaced the Dow Jones Industrial Average and the Standard & Poors 500 by over 15% annually (Graham, 1973). An additional item to consider is that the Value Investing method tends to greatly reduce risk.

This author believes that Graham's investment paradigms of Intrinsic Value and Margin of Safety, as well as the diversification discussed by Buffett, can be applied to purchasing RO in satellite systems.

The DoD satellite community can utilize the concept depicted in Figure 5 to identify the RO with the highest probability and impact score. As previously discussed, the probability of the RO being exercised relates directly to the TRL of that option or of the related technology. Options with higher TRLs, and thus higher probabilities of exercise, would provide one indication of a Margin of Safety for that investment. At this point each RO would be priced for inclusion into the system (satellite, constellation, and terminals) and for an exercise price on the option. All options in the green shaded areas would then be ranked according to their price. The calculation of probability and impact would give program managers (the investors in this case) the Intrinsic Value of the option. Ranking the RO by their individual price would then give the program manager the ability to determine the relative Margin of Safety for the basket of options available for purchase. The acquisition community would need to purchase at least 5 RO to provide the minimal diversification needed to help mitigate the risk that some of the options they have purchased will not be exercised. As such the satellite system acquisition community

©2007 The MITRE Corporation. All Rights Reserved.

would invest in a basket of options, of which each option can be exercised if and when the user community's requirements show the need for such a capability.

An interesting difference between a financial option and a RO is the time allowed to exercise the option. Financial options will often have a time to exercise measured in months. Predicting an event is not an exact science, and significantly shortening the time period that an event must happen often decreases the likelihood of an investment in financial options being profitable. This contrasts with RO that can be exercised over many years in most cases. The long life of a RO greatly reduces the risk added by needing to exercise the option in a short time period.

A key item not yet discussed is how to value the impact of an option. This author contends that not all value can be monetized. An example of this could include determining the value of investing in a capability that decreases the time required to attack a given target. The value of a RO, especially in a not for profit venture, includes both the possible cost saved for operations and maintenance, and the operational value gained. Often a future investment for a public project will be judged by money saved when compared to the current system that provides a related capability. This fails to value the operational gain, which can often be the primary reason for making any investment. Similarly, determining the impact of the RO so this can be applied to Figure 5 is inexact. This is analogous to Buffett's and Graham's method of determining an Intrinsic Value and a Margin of Safety, but not forcing an algorithm to precisely monetize the expected return on investment. Therefore, an increasing number of RO in the green area of Figure 5 that can be purchased will, along with applying the concept of a Margin of Safety, significantly reduce risk to the project.

Summary

This paper has discussed possible methods to identify RO opportunities within individual satellites and terminals, constellations of the same satellites, across constellations, and including the Commercial SATCOM providers. DSMs are introduced as a tool to identify dependencies between subsystems. DSMs are also discussed as a way to aid designers and Systems Engineers to identify which systems must be upgraded in a synchronized manner. Further work is being done to determine how to use DSMs to identify areas for standardization and overdesign.

To identify the possible options is only a first step in the process. This paper also presents a method to evaluate and compare options according to their impact on user capability and their probability of being exercised. This method enables the acquisition community to identify a basket of probable options in which to invest. The final step is to compare the price of purchasing the options and any incremental cost of exercising the options. While system upgrades are often evaluated according to potential fiscal savings, operational value added must also be considered, even if these benefits cannot be monetized for ease of comparison. Determining the combination of fiscal savings and operational value added will enable the acquisition community to determine the best value/cost options in which to invest. Finally, the investment paradigm proposed does not follow traditional net present value or discounted cash flow calculations, which can

©2007 The MITRE Corporation. All Rights Reserved.

appear to be precise but in reality their accuracy depends on the unlikely correct prediction of interest rates over many years. That is a key strength of the proposed paradigm. This paradigm does follow the very successful Value Investing methodology that has served many users over the past 50 years.

©2007 The MITRE Corporation. All Rights Reserved.

References

Bartolomei, Jason. Hot and Cold Spot Analysis segment of Complexilities Update. Briefing presented at MITRE and MIT working group meeting. Bedford, MA 2005

Cottle, S., Roger F. Murray, Frank E. Block. 1988. Graham and Dodd's Security Analysis. New York: McGraw Hill.

Dahlgren, J.W. RO and value driven design in spiral development. Paper presented at 2006 Command and Control Research and Technology Symposium (CCRTS), Coronado, Ca. 2006

De Neufville, R. "USE of 'OPTIONS' in DESIGN". Briefing presented to the MITRE Corporation during a Technology Interchange Meeting with Massachusetts Institute of Technology. Bedford, MA January 2005.

Graham, B. 1973. *The Intelligent Investor*. New York: Harper & Row.

Hagstrom, Robert G. Jr. 1994. *The Warren Buffett Way: Investment Strategies of the World's Greatest Investor*. Wiley & Sons.

The Design Structure Matrix Web Site. `www.dsmweb.org`, 2006.

Kalligeros, K., Richard de Neufville, Olivier de Weck, David Geltner, Patrick Jalliet. Platforming and RO in large scale system design. PhD dissertation presentation. Cambridge, MA 2006

Sears, K. Commercial SATCOM and TCA 3.0. Briefing presented at 2006 DoD Commercial SATCOM Users Work Shop, Rosslyn, VA 2006.

©2007 The MITRE Corporation. All Rights Reserved.