A System Theoretical Approach to Situation Awareness and its application

A Holistic View of Purposeful Elements

Student

Charlie Lagervik
Per Gustavsson

Cambridge, September 27, 2006

Objectives

- Address Situational Awareness
- Concept of Situational Awareness
- Machine human context
- Example of our usage
- Our continued work

- A glimpse of ideas in building Situation Awareness

Outline

- Why want a theoretical framework for Situational Awareness?

- Theory:
  - Ackoff - Adaptive Management
  - Bedny & Meister - Orientational Activity
- Lagervik conceptual design for the common part of SA,
- Architecture that uses the idea:
- An Implementation
  - Costal Control Application
- Summarization
- Future Work
- Questions

Transformation in defense operations

Not in paper

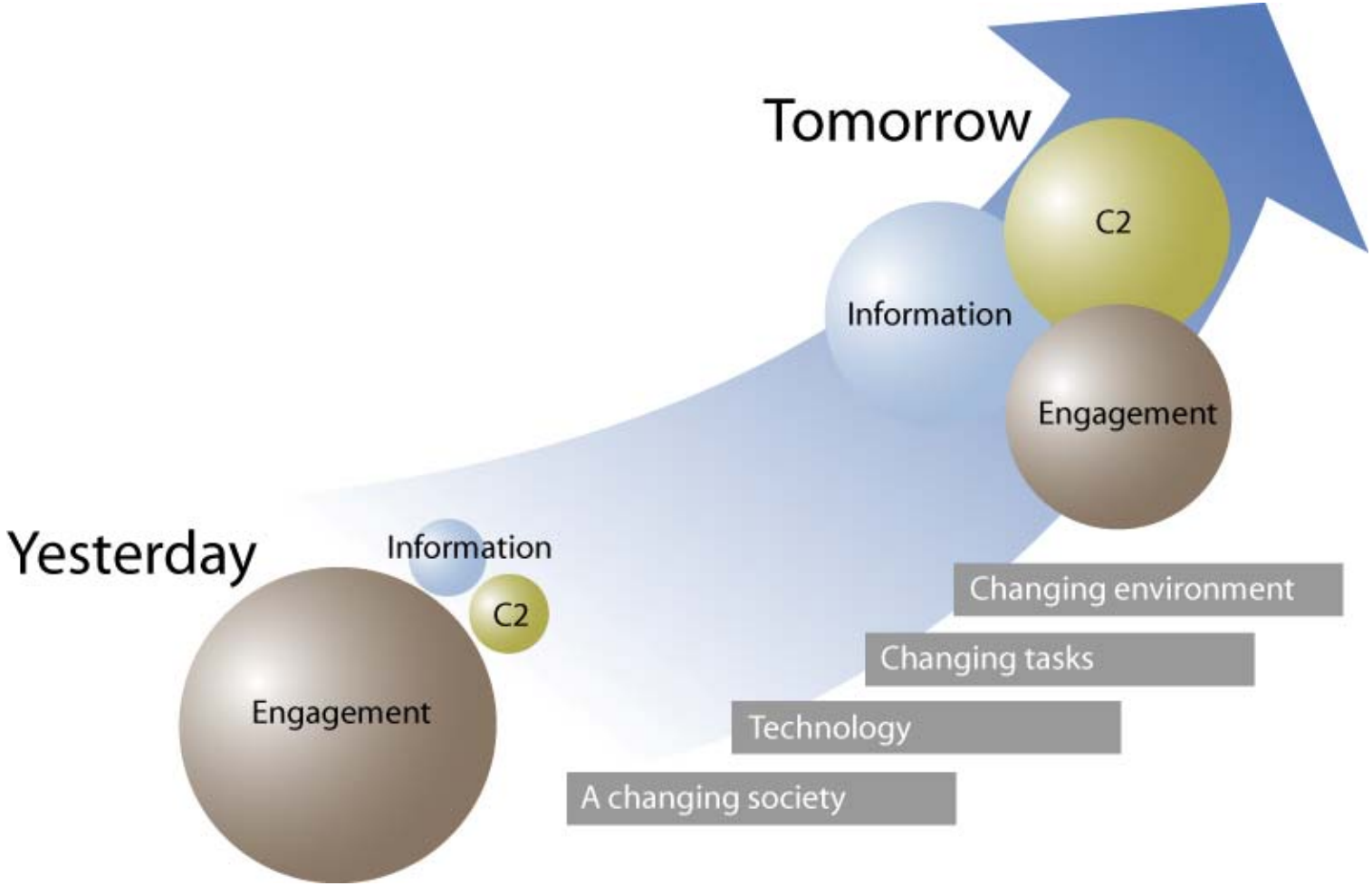

Requirements

Not in paper

- Net-Centric
- Adaptive
- Multi User
- Multi Role
- Information Fusion
- Knowledge
- Interoperability
- Decision Support
- Temporal
- Networked

Net-Centric
Technical Networks enables Human Networks

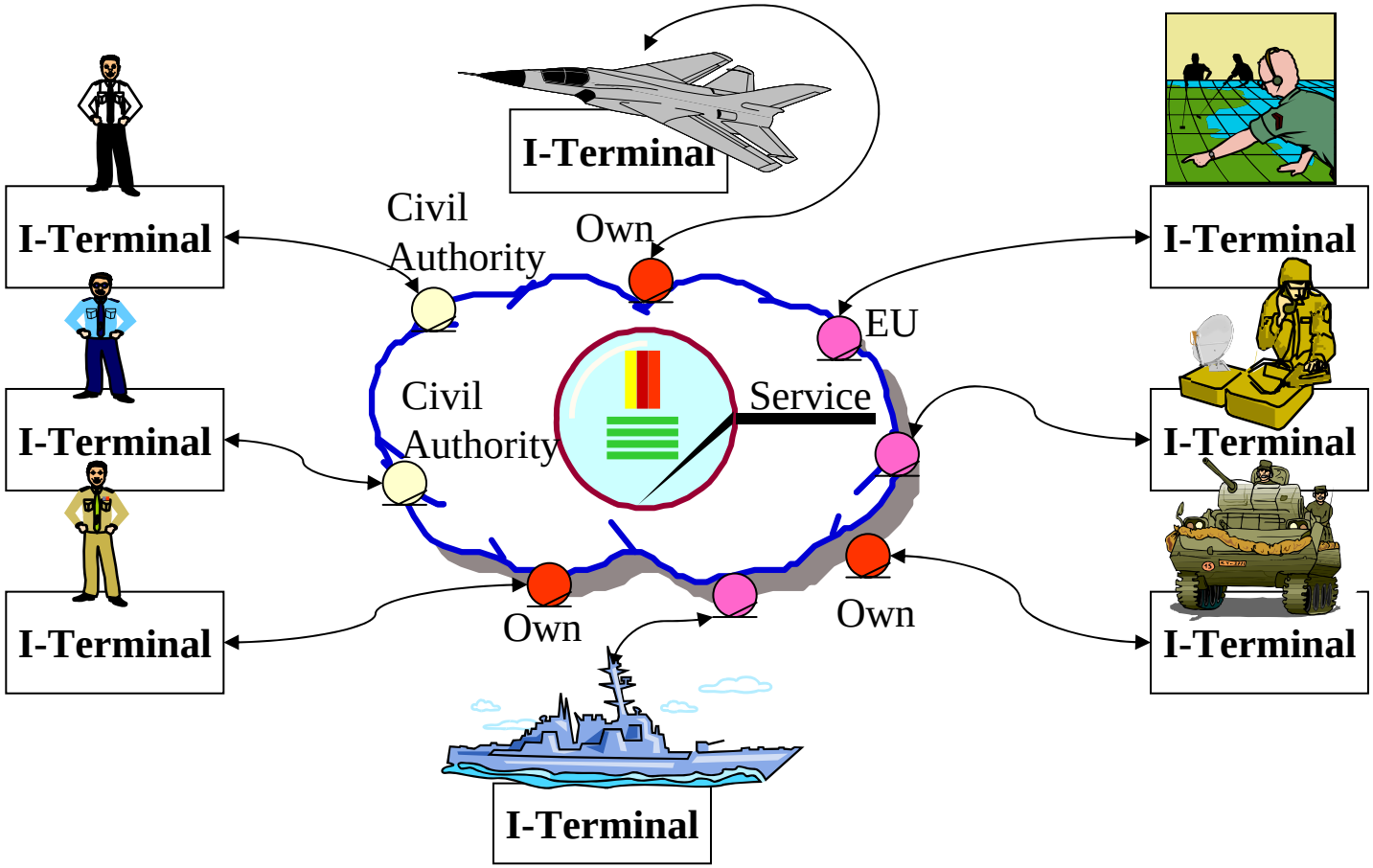

Joint / Coalition / Interservice

Not in paper

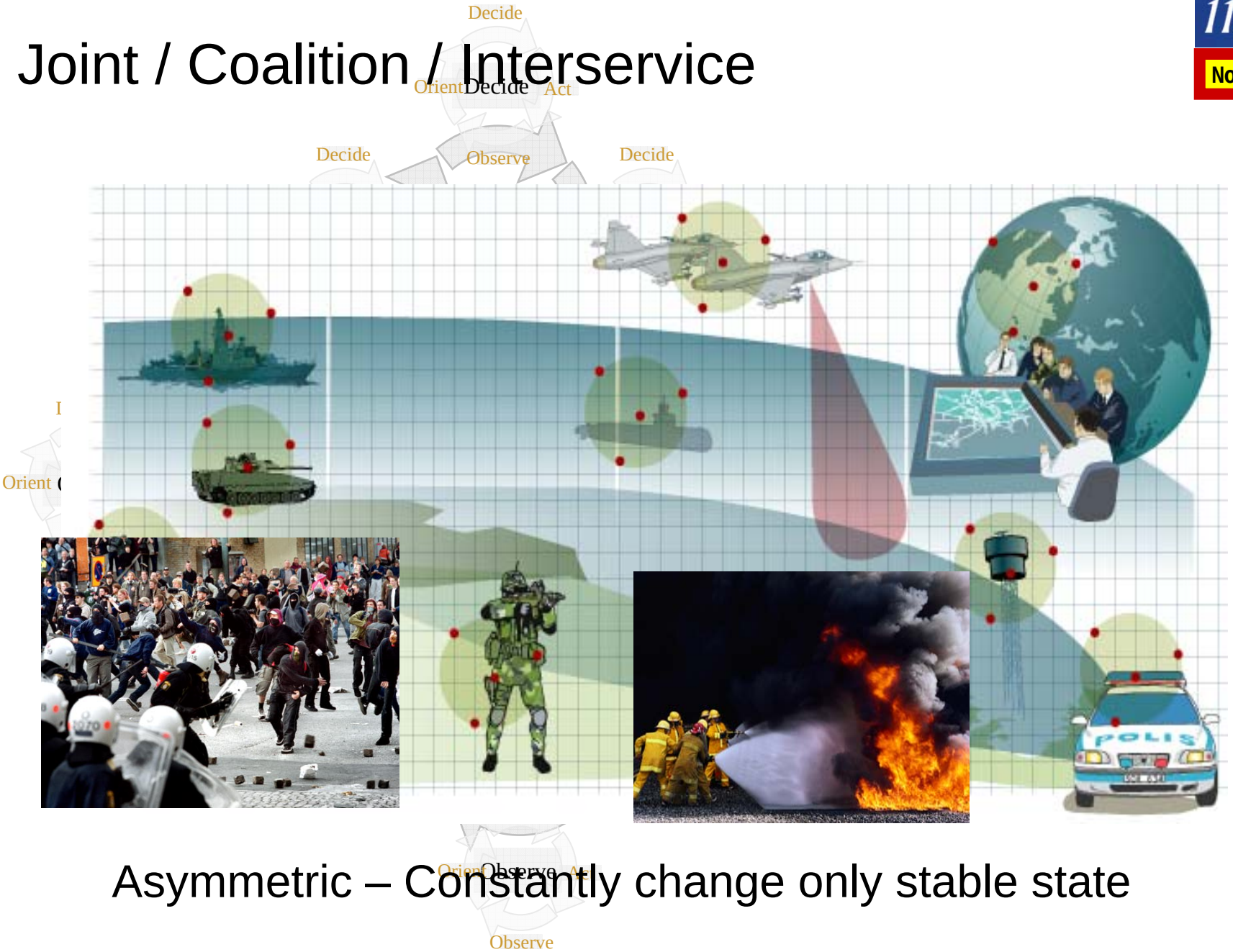

Asymmetric – Constantly change only stable state

Background

Not in paper

- Our interest comes from
  - Want to supply commander with Intention Awareness
  - Need a system that can execute multi-hypothesis of COA from previous, present and predicted states/situations
  - Need models that are adaptive, goal oriented
  - Models need internal representation of state, mission, vision, goal
  - Models need to be able to exchange information
  - Models need to have some internal representation of the environment
  - Need an architecture
- Realized that such representation of situation also is needed for operational systems.
- Thought that if we have such representation present in the M&S domain the same representation can be used in the operational domain.

Definitions

Decision-Making *with Act*

- *A decision is made to make something occur that should not else occur or to make something not to occur that should else occur*
  - Expected result in a certain time intervall
  - Based on assumptions, information, feelings
  - Conscious vs. unconscious

Situational Awareness

- *The conscious and unconscious dynamic processes to achieve a reflection of the systems purpose and form, function, system state and future system states*

Intention Awareness

- *The sub part of Situation Awareness that express the path between current state and goal state for own and opponents'.*

The change of change

- Constant change makes it harder to make decisions
  - Uncertainty in what to look for
  - Past information that were valid then is not guaranteed for decision-making now

Myth: *The more information the decision maker has, the better decision is made .*

Information Overload

- Filtering
- Limited time -> Filtering delegated to other people
- Limited time -> computer filtration
- But computer has no understanding for the situation of the data or the situation of the decision-making

JDL-Model (altered)

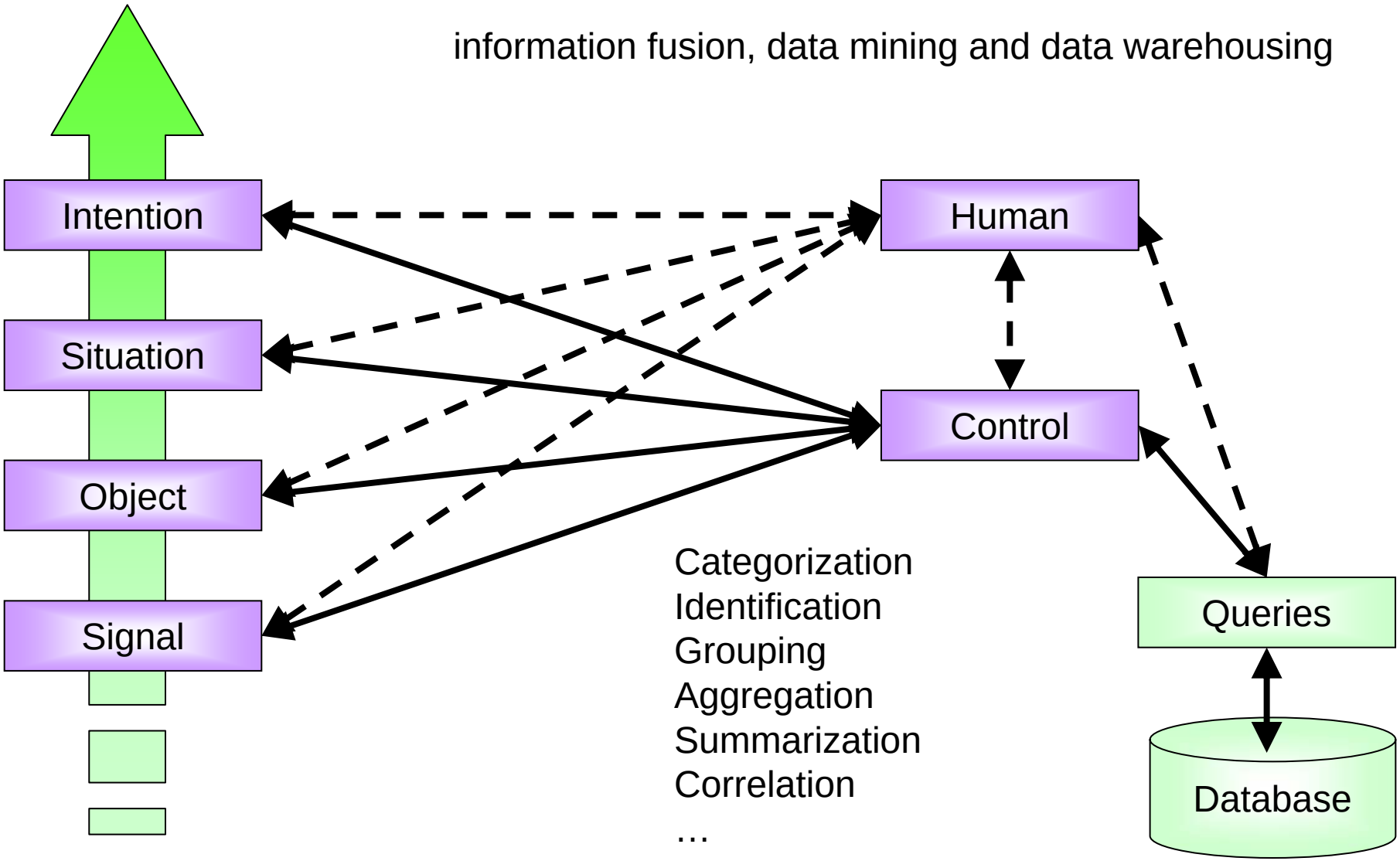

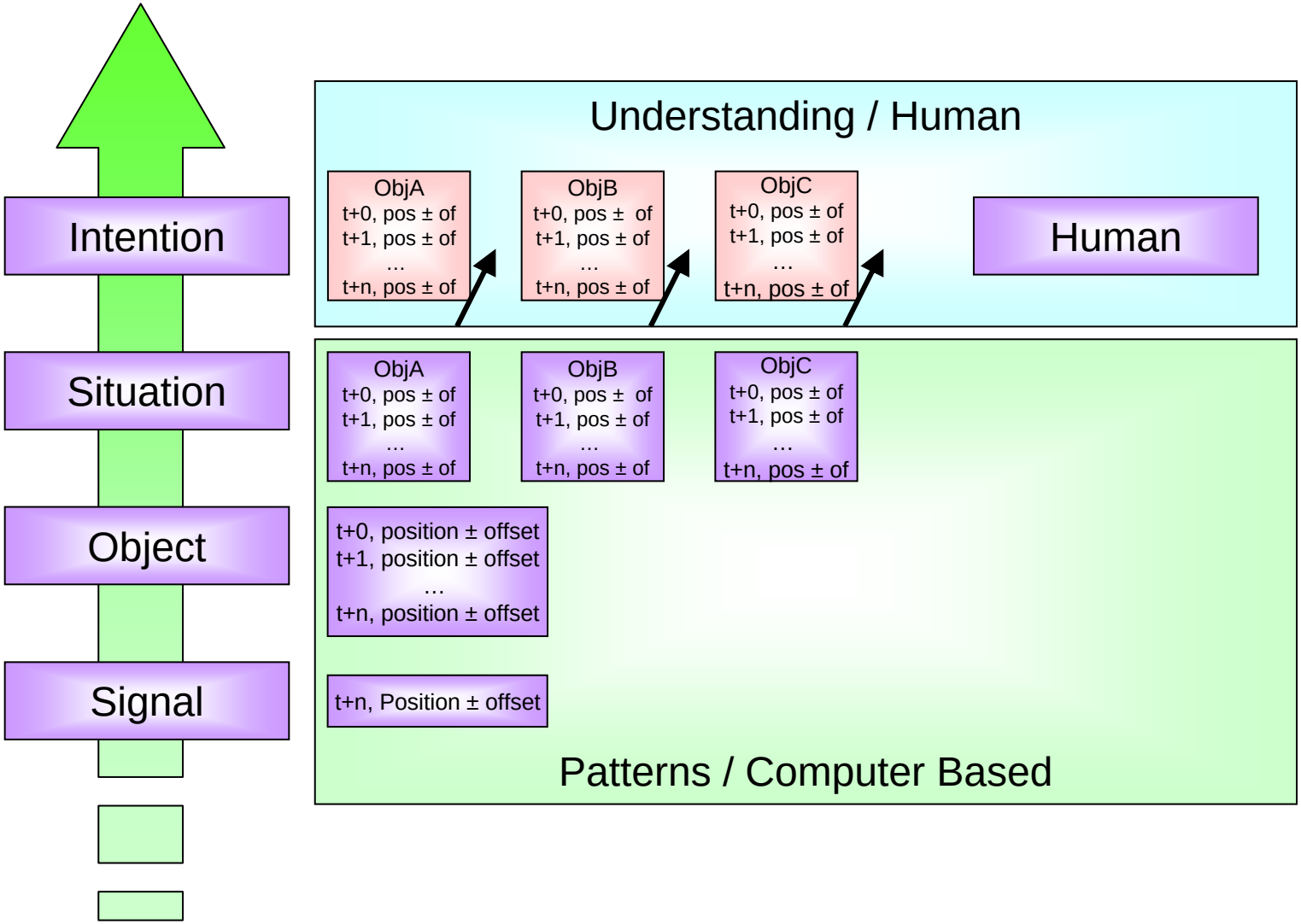
Intention
Situation
Object
Signal
Understanding / Human
ObjA
t+0, pos ± of
t+1, pos ± of
…
t+n, pos ± of
ObjB
t+0, pos ± of
t+1, pos ± of
…
t+n, pos ± of
ObjC
t+0, pos ± of
t+1, pos ± of
…
t+n, pos ± of
Human
ObjA
t+0, pos ± of
t+1, pos ± of
…
t+n, pos ± of
ObjB
t+0, pos ± of
t+1, pos ± of
…
t+n, pos ± of
ObjC
t+0, pos ± of
t+1, pos ± of
…
t+n, pos ± of
t+0, position ± offset
t+1, position ± offset
…
t+n, position ± offset
t+n, Position ± offset
Patterns / Computer Based

Situation Awareness

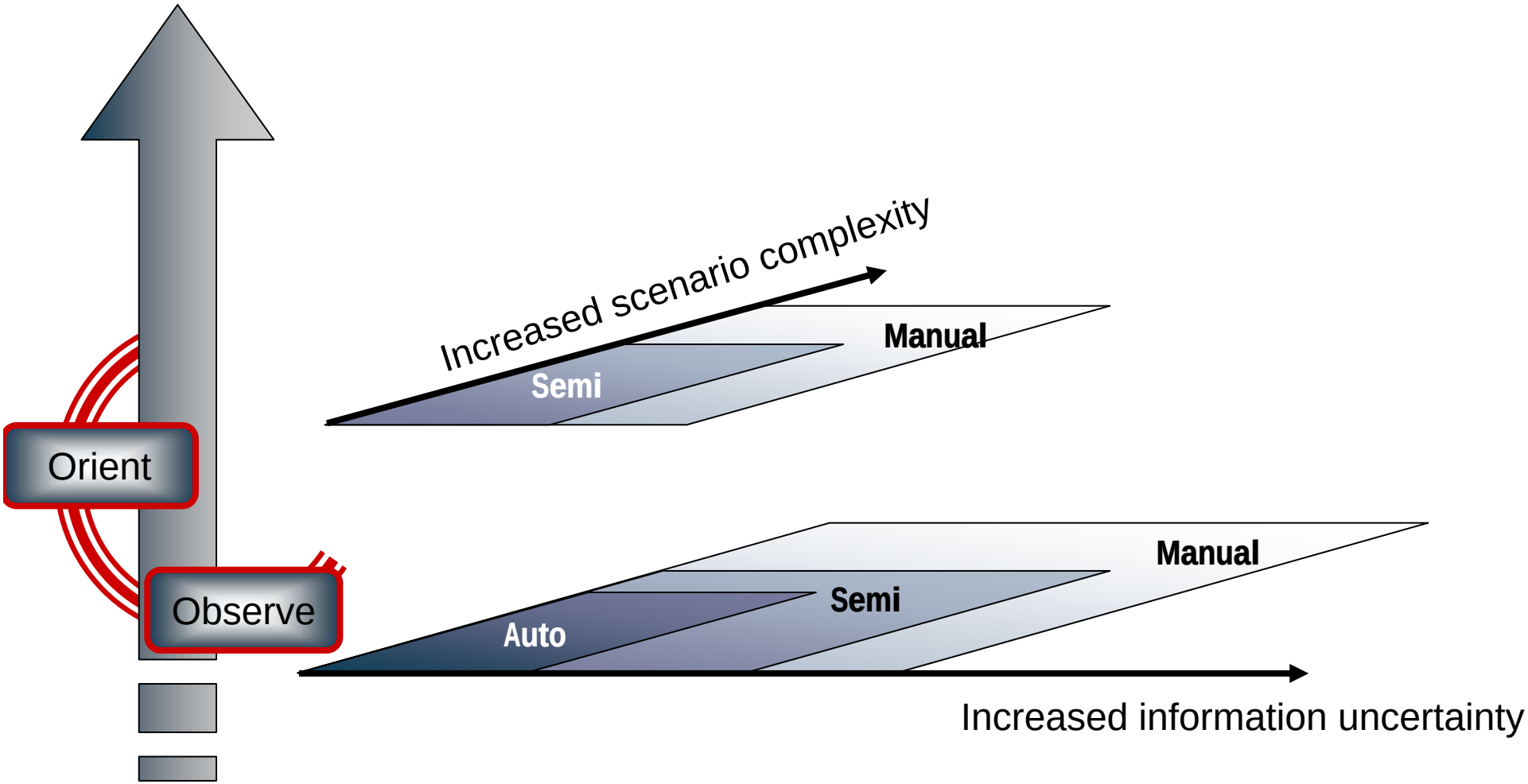

Situation Awareness

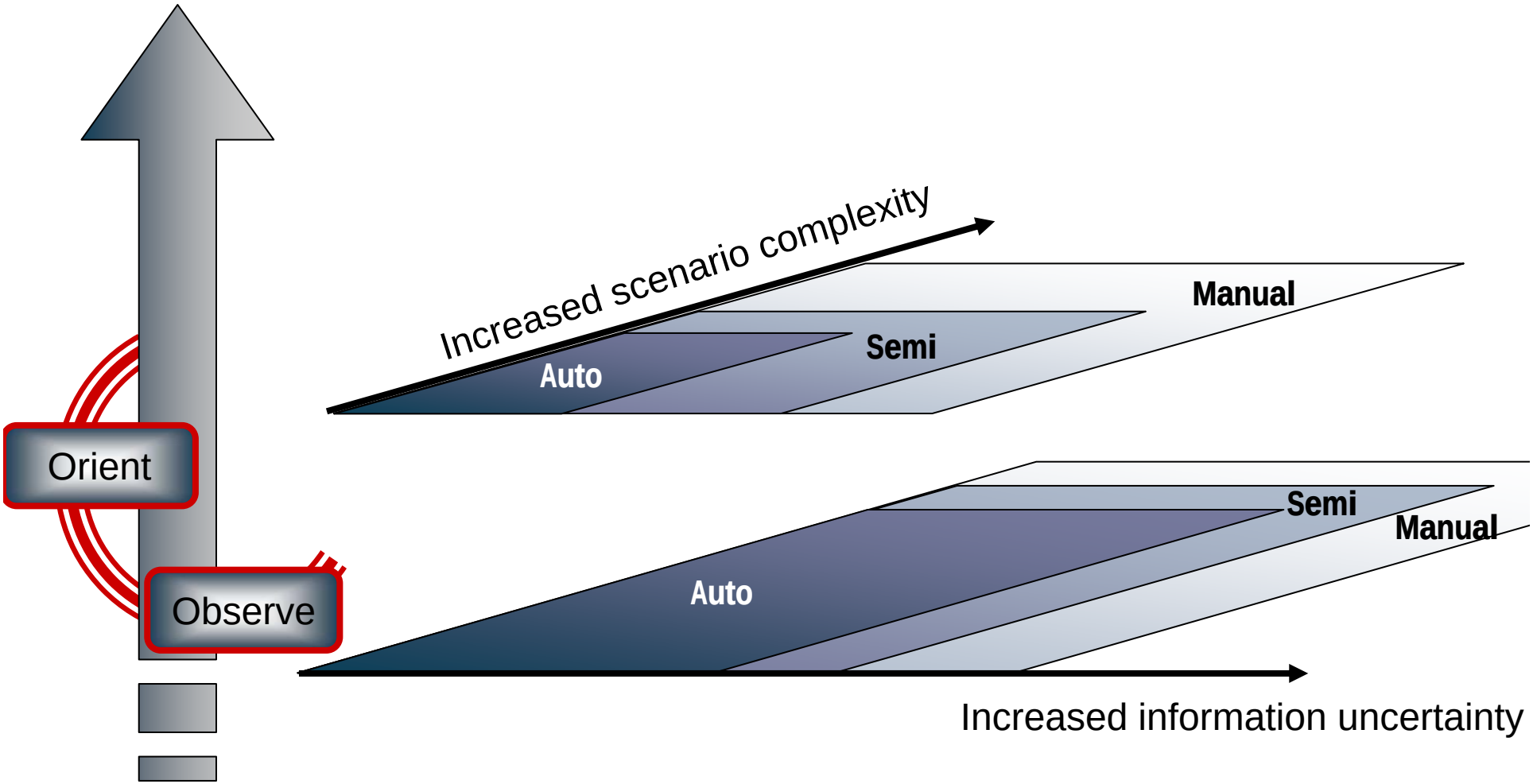

Automated

- Computers will be in the position of deciding what to look for.
  - Need understanding of the nature of the decision and what will effect the decision.
- Computer must be able to reason about the situation.

- Reasoning systems: Goal seeking systems.
  - The properties of the elements are monitored and are used to understand the goal of the element. The understanding about how the different properties of the environment and other elements in the system affect the goal of the element is the main concern

Social Purposeful System

- Humans are non-deterministic systems
- A system that at a first glace seems to be totally mechanical and deterministic often involves humans as decision makers, for a part of the system or for the whole system.
- So to understand the system the goal of the human has to be determined and evaluated in the process.
- A social system should be described as a social system with models indented for this description.

How to describe Situation Awareness

- System Theory
  - Adaptive-Learning (Ackoff)
    - intended for describing the internal process for an organization to reach SA
  - Orientational-Activity (Bedny & Meister)
    - intended for describing the internal process for a person to reach SA

- Even though the difference in fields there are common aspect according to SA that can be compared.

- The comparison is focusing on these parts that are common for both of the theories (the intersection of the theories).

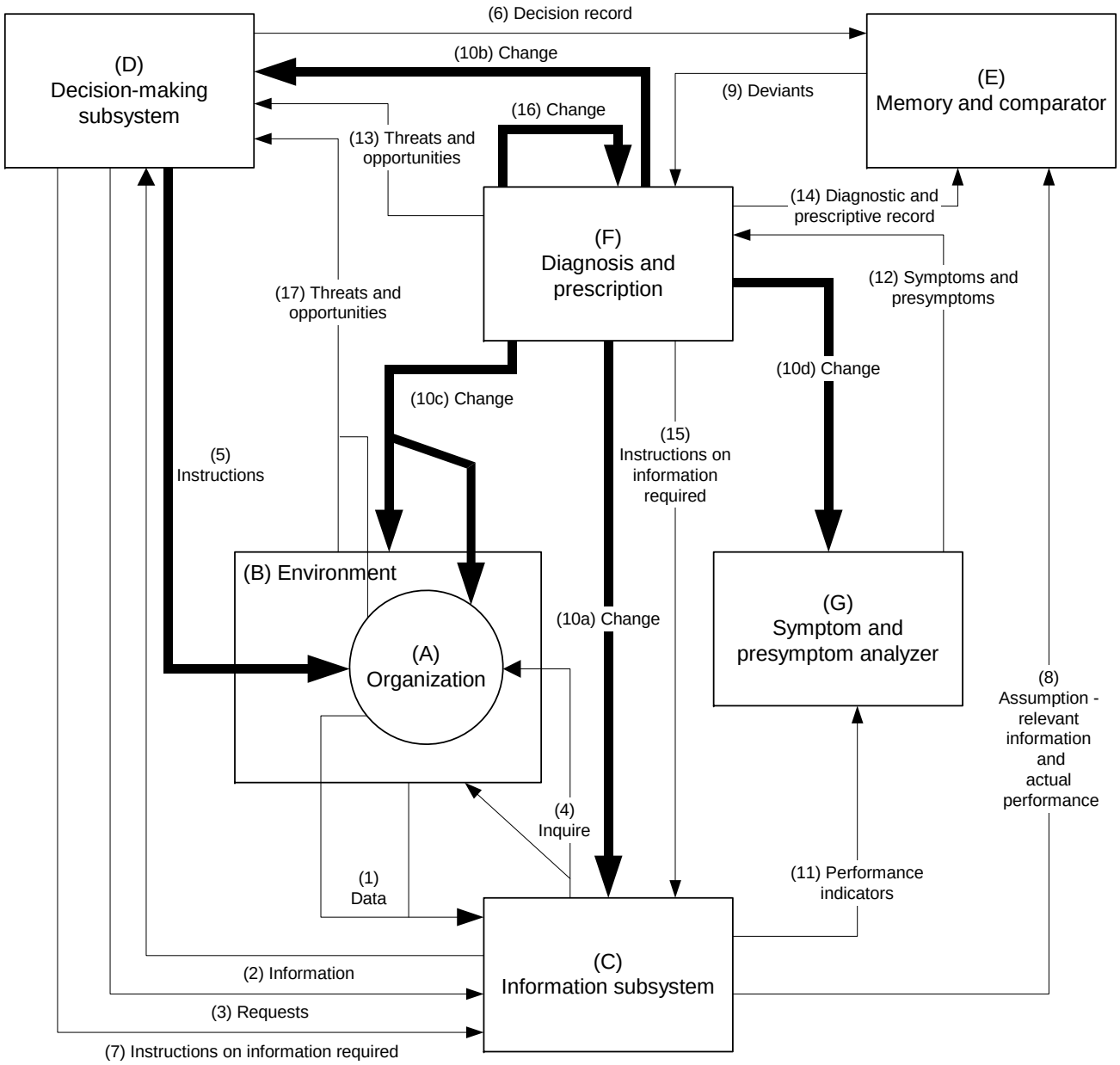

Adaptive-learning management system, after Ackoff

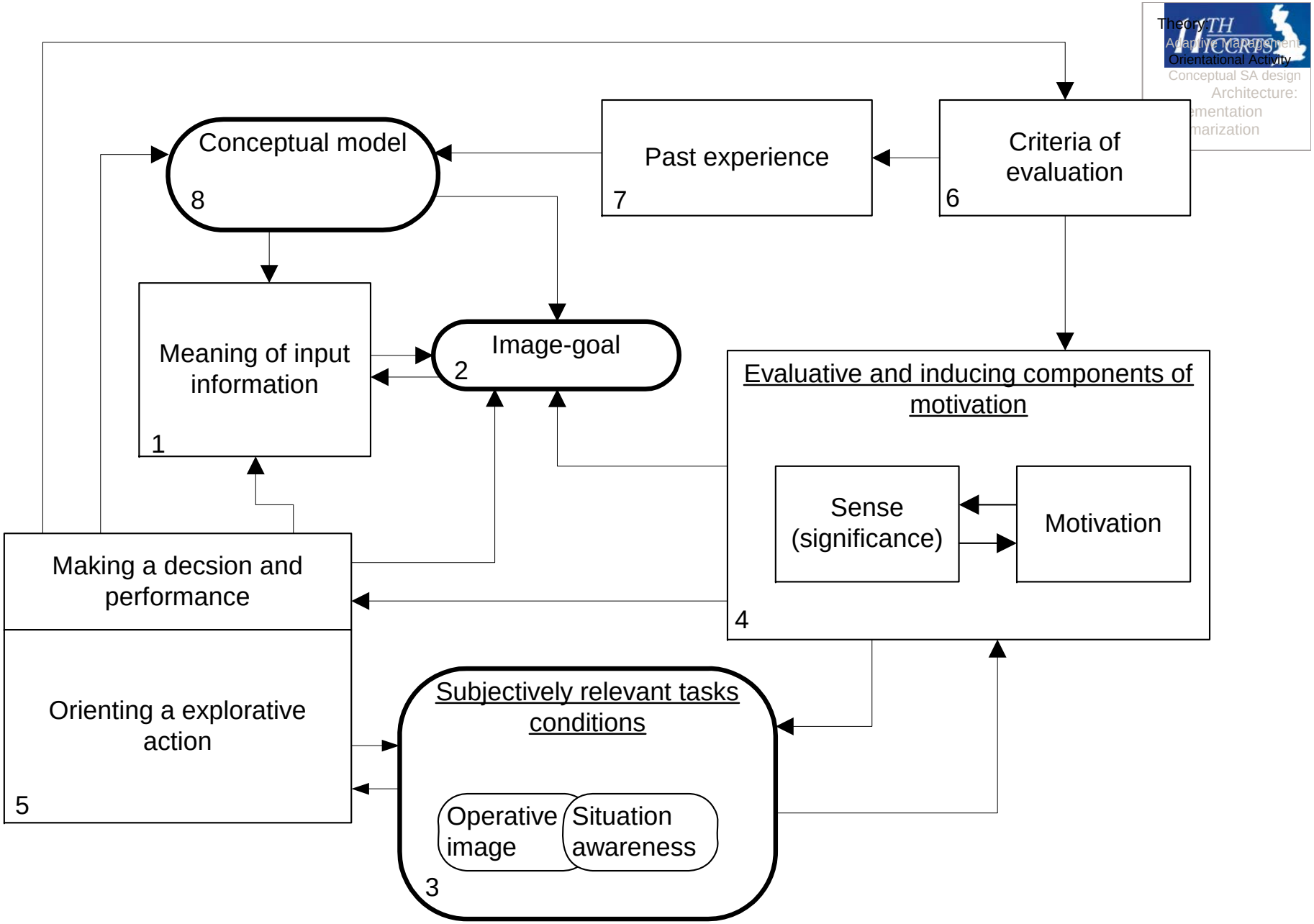

functional model of orientational activity, after Bedny & Meister

Orientational activity (Bedny & Meister)	Management information (Ackoff)	Conceptual system
Meaning of input information	Information subsystem	Data gateway
Evaluative and inducing components of motivation	Memory and comparator	Evaluative system
Conceptual model, past experience	Memory and comparator	Memory
Image-goal	(Decision-making subsystem)	Goal
Making a decision and performance	Decision-making subsystem	Perform
Subjectively relevant tasks conditions	Symptom and presymptom analyzer, Diagnosis and prescription	Diagnostic

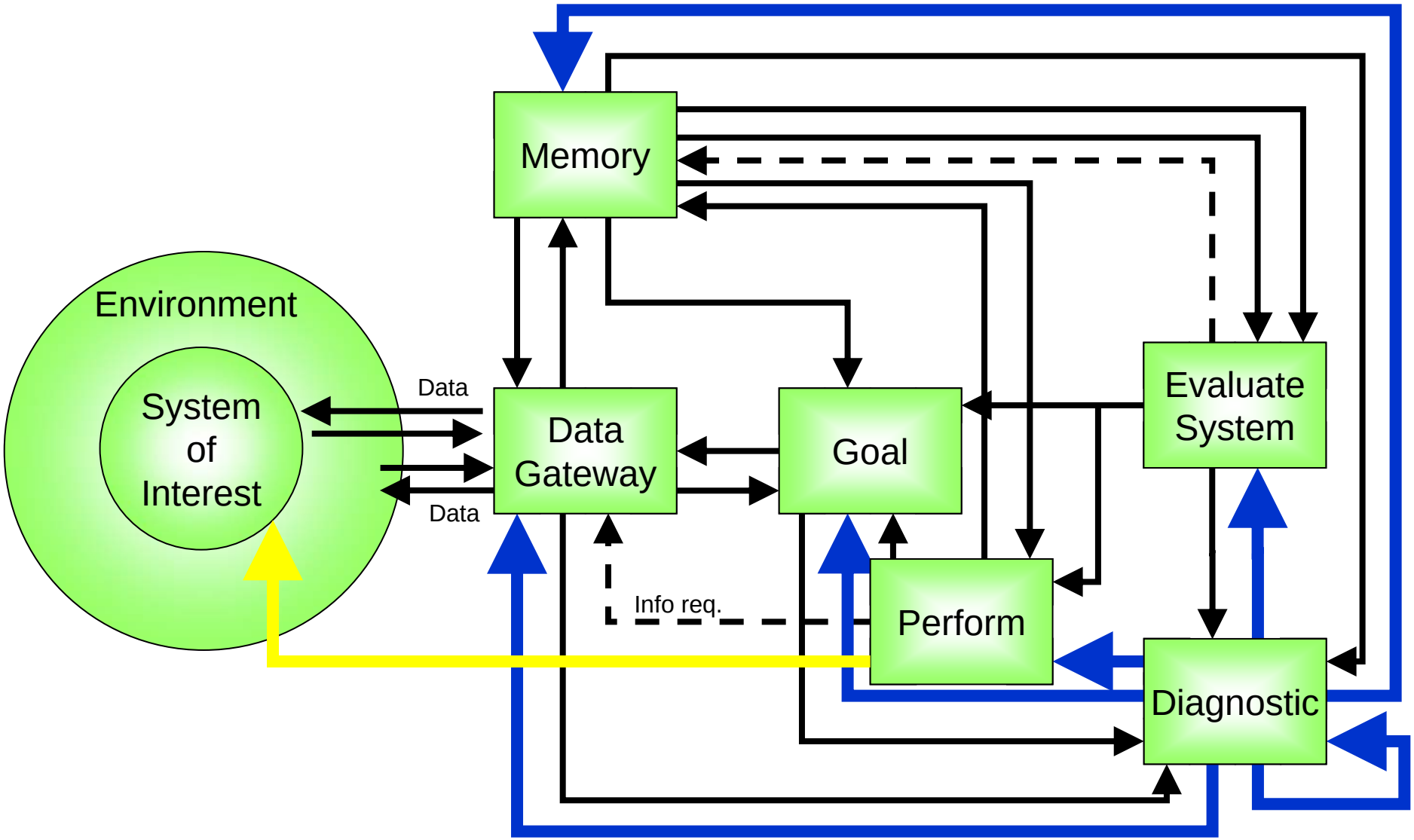
Memory
Environment
System of Interest
Data
Data
Data Gateway
Goal
Evaluate System
Info req.
Perform
Diagnostic

Connection between two systems

- Interchange of data, information, awareness, knowledge, wisdom

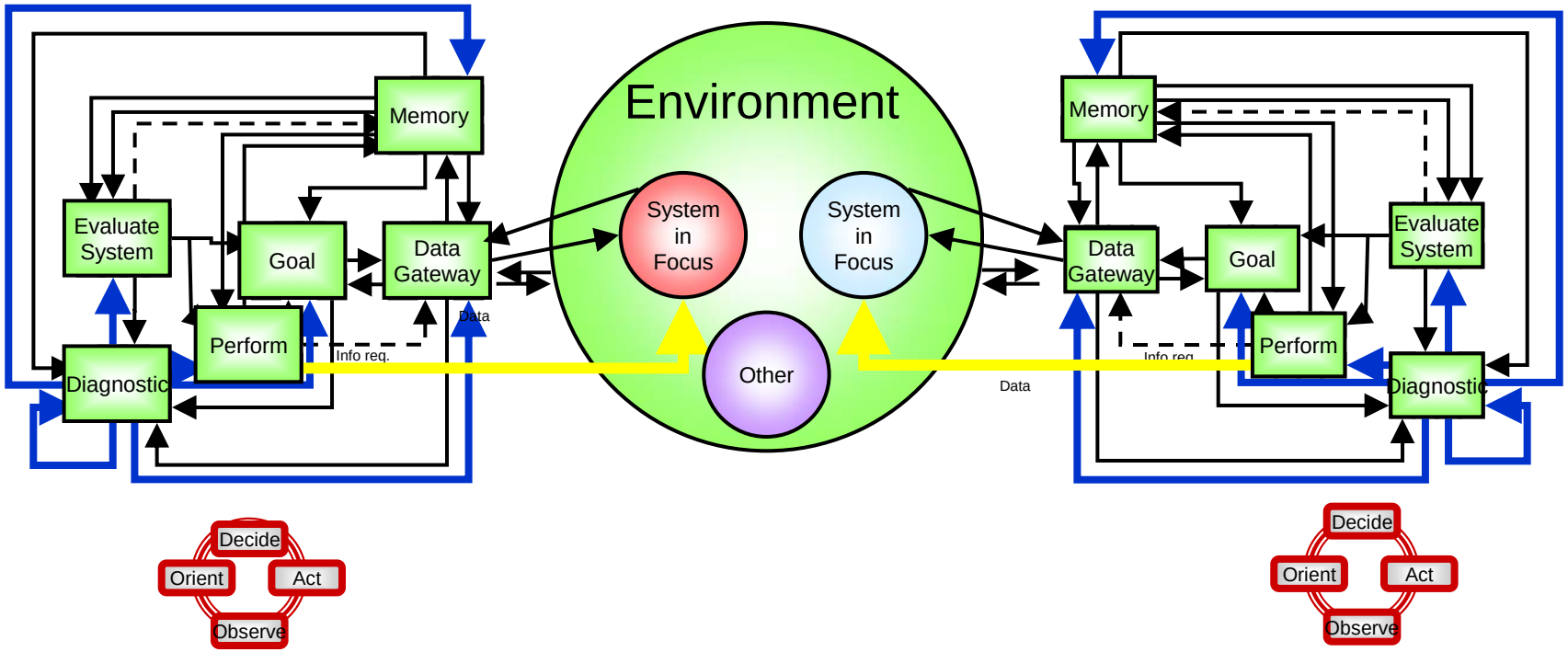

Information Sharing Interoperability

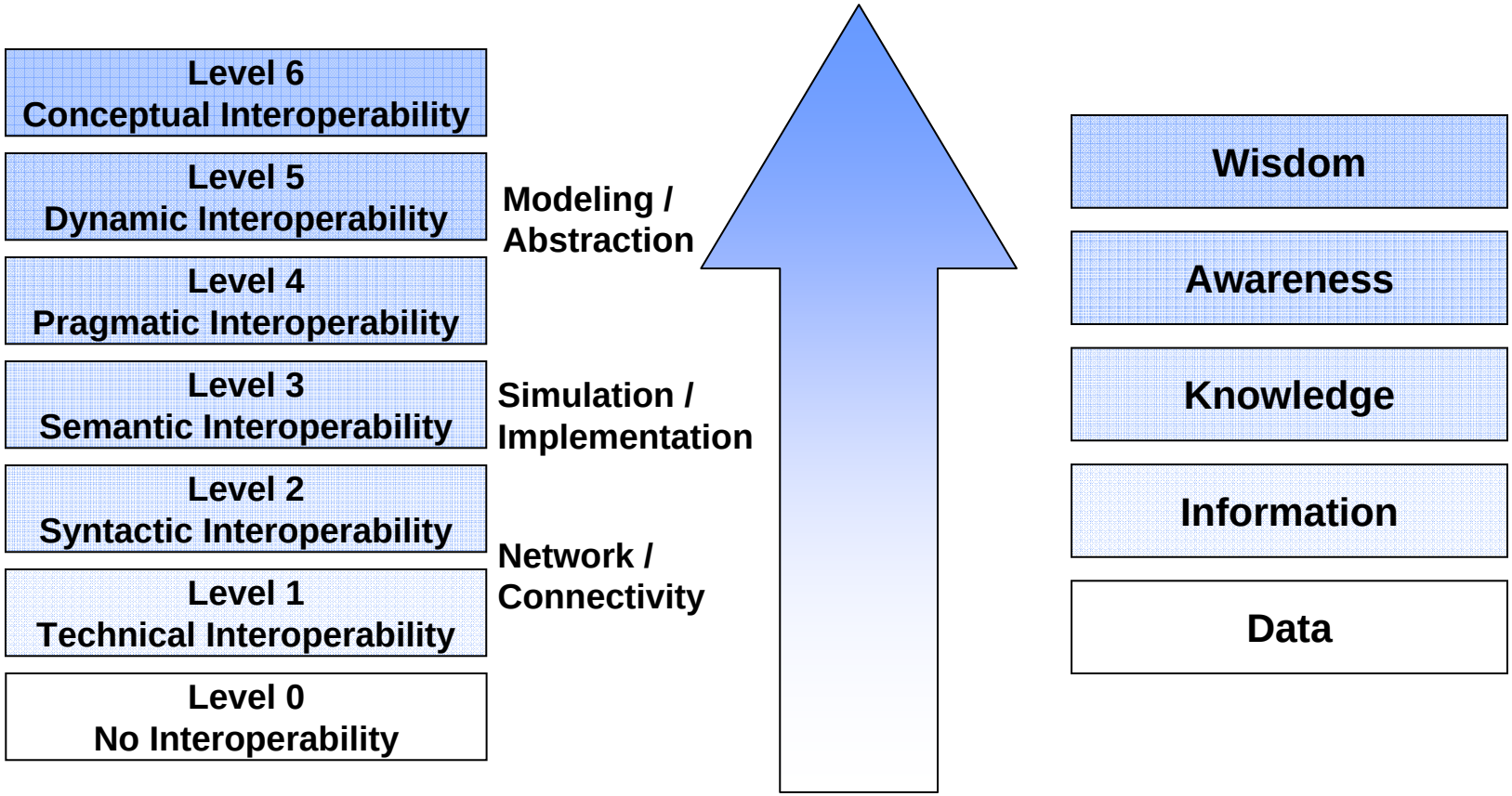

Multi-Hypothesis Intention Simulation Agent Architecture

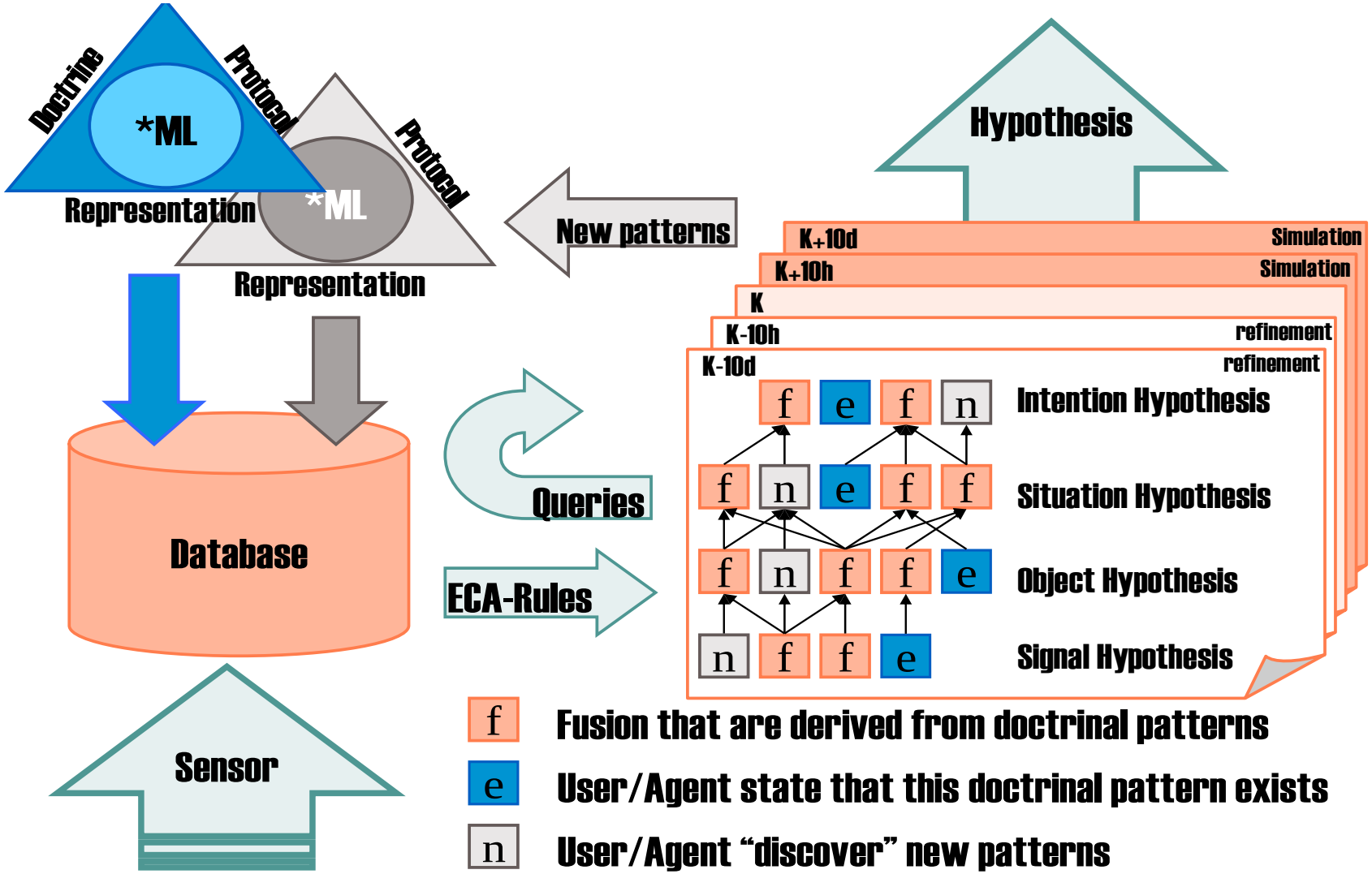

Onotlogy (other representation of SA)

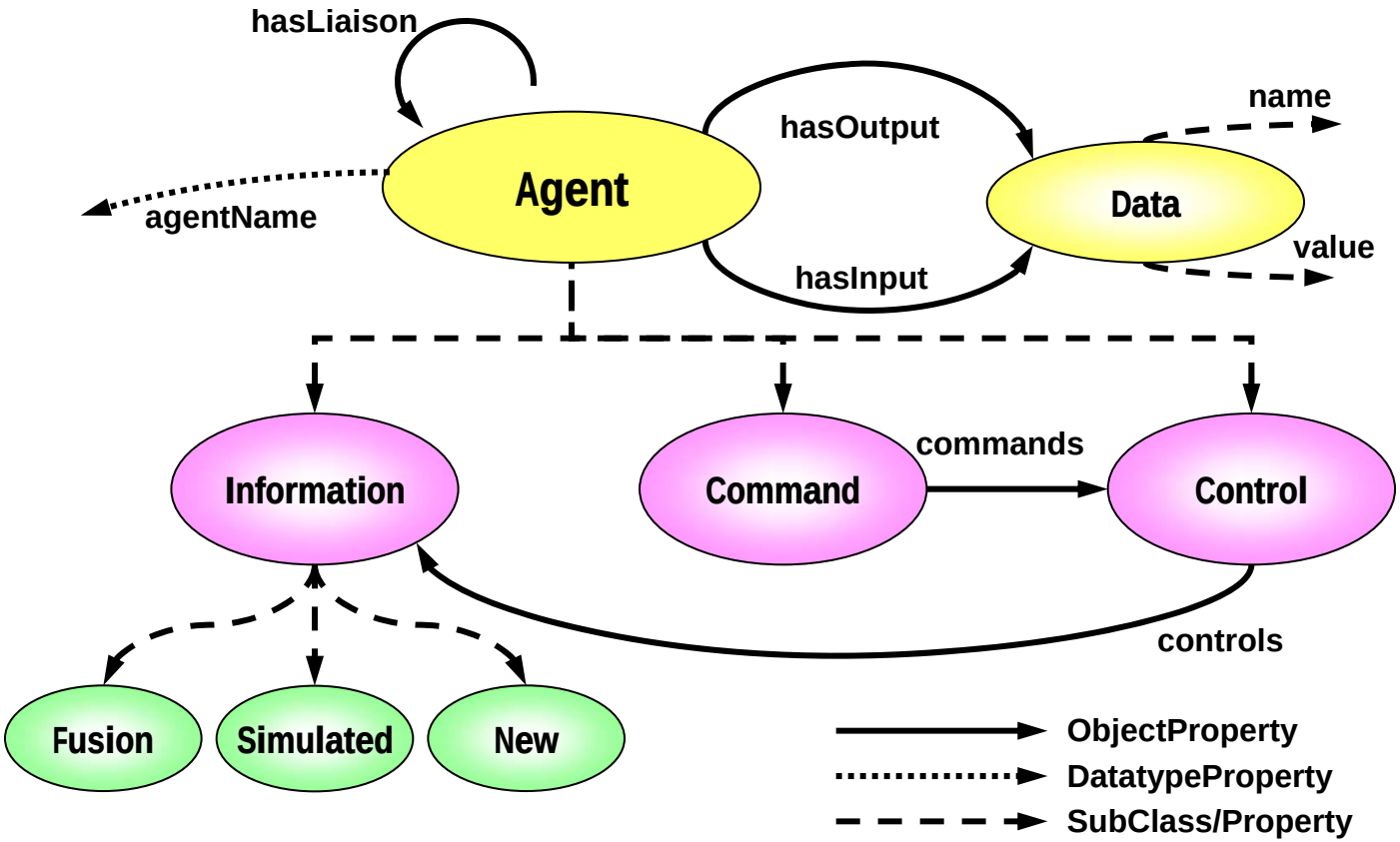

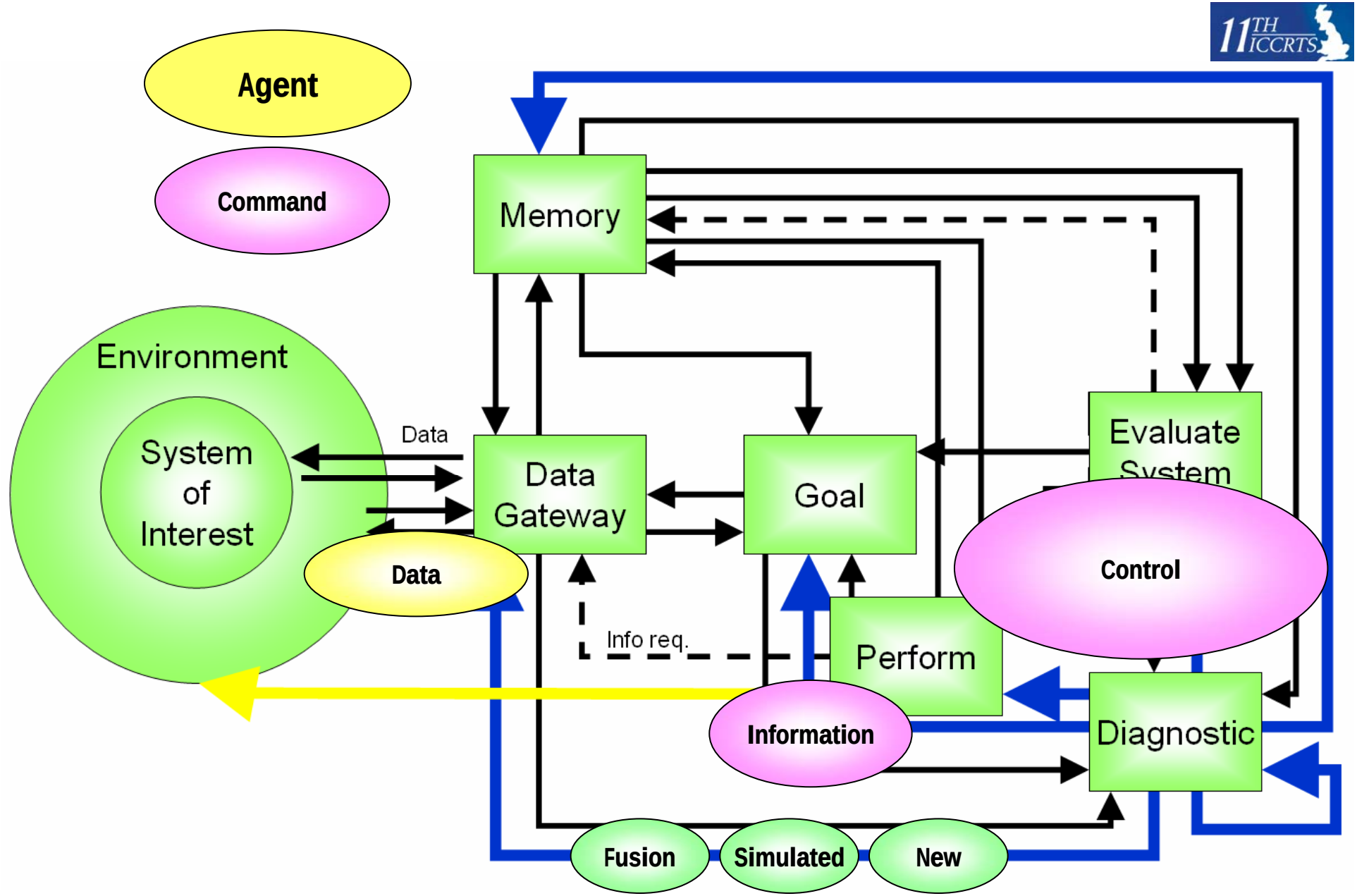
Agent
Command
Memory
Environment
System of Interest
Data
Data Gateway
Goal
Evaluate System
Data
Control
Info req.
Perform
Information
Diagnostic
Fusion
Simulated
New

Costal Control

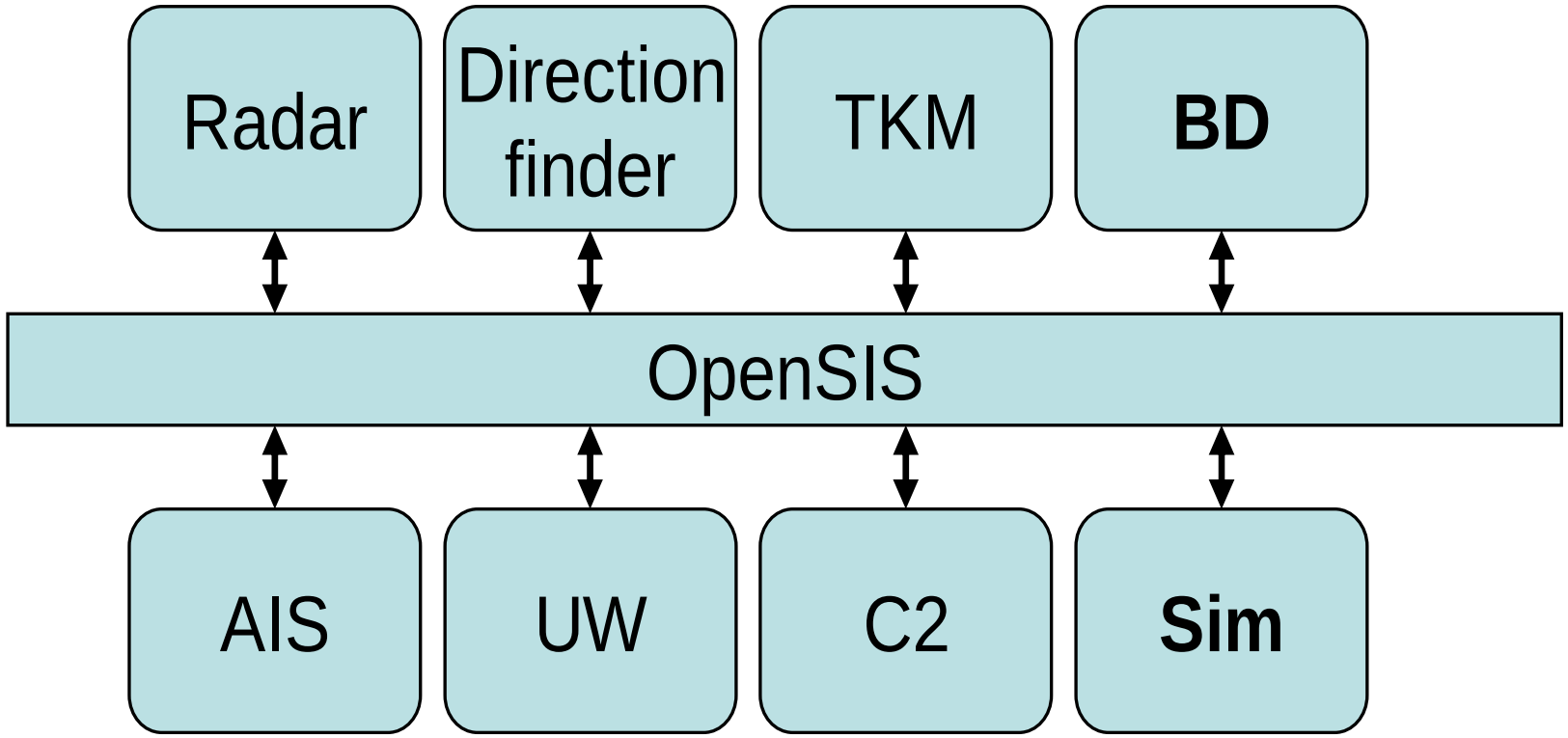

Future Interest

- Memory: shared memory between SA component and decision-maker.
  - *Representation of information, LCIM , images, C-BML*
- Unconscious process, *the N component finding new relations, goals, similarities etc*
- Requiring new Data/Information. *Dynamic and Conceptual Interoperability*
- Curiosity. The computer should not stop to execute just because there are no instructions to execute.
- Motivation and sense. Motivation is regulating the energy of achieving the goal, and sense is responsible for determine the priority (significance) of the goal for the system.
- Sensor feedback. the importance and how the data is used and how the sensors should be design to support the given feedback of the gathered data.
  - also need sensor system with ability to make use of such information

In Focus

- Representation
  - Conceptual representation of the belief process (OWL-S, UML)
  - Semantic, Pragmatic representation C-BML
    - Web services, grammar, ontology for orders and reports
  - Syntactic, Semantic representation JC3IEDM, EXDL

- Implement more fusion algorithms

- Experimentation
- Qualitative VV&A

Summarization

- The Lagervik System Theoretical Approach to Situation Awareness helps us to think
- Developing
  - Information fusion framework (MuHISA)
  - Costal application
- Future
  - Representation
  - More fusion algorithms
  - Qualitative VV&A

Questions?

Charlie.Lagervik & Per.M.Gustavsson

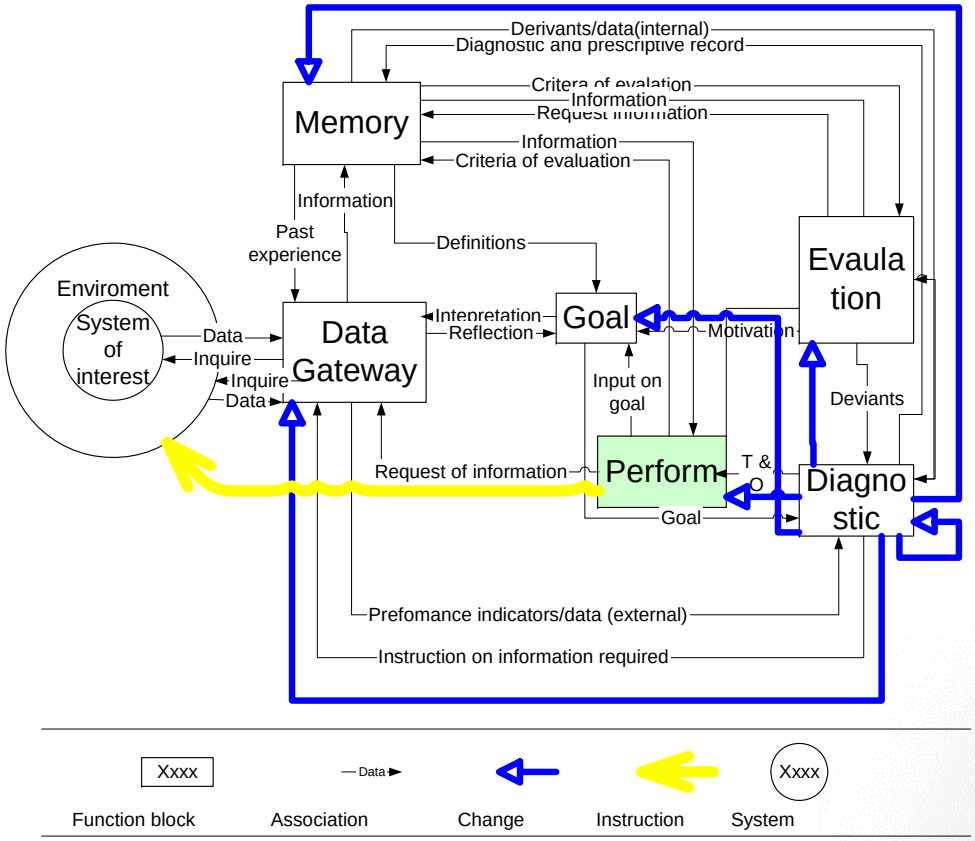

www.saabgroup.com

Ontology

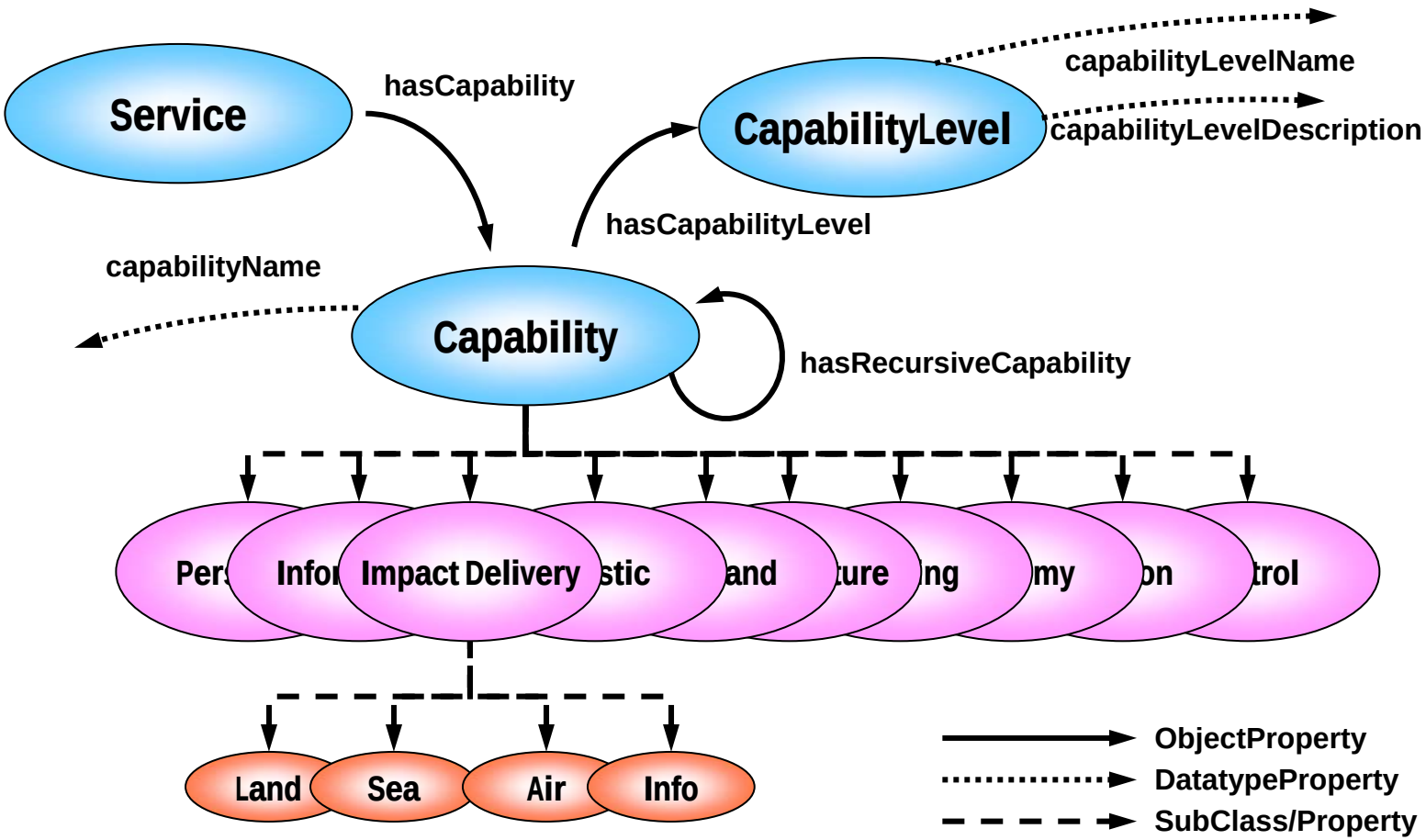
Service
hasCapability
CapabilityLevel
capabilityLevelName
capabilityLevelDescription
hasCapabilityLevel
capabilityName
Capability
hasRecursiveCapability
Pers
Infor
Impact Delivery
stic
and
ture
ng
my
on
trol
Land
Sea
Air
Info
ObjectProperty
DatatypeProperty
SubClass/Property