10TH INTERNATIONAL COMMAND AND CONTROL RESEARCH AND TECHNOLOGY SYMPOSIUM
THE FUTURE OF C2

Development of An Integrated Executable C4I Architecture Model Applying Congruent Processes, Methods, and Tools

TRACK : C4ISR/C2 Architecture

Presentor : Dr. Joongyoon Lee
SE Technology Ltd.,
Republic Of Korea

Status & Problems

- **The Army, Navy, Air Force, Joint Chiefs of Staff of ROK have been developed their own C4I systems independently for their own needs.**
  - ➔ There are ***interoperability problems*** in C4I, sensor and shooter systems of ROK.
  - ➔ There are ***investment duplication of functions*** of C4I systems

- **Moreover, there were *incident requirements* during the development of these C4I systems.**
  - ➔ E.g. : The C4I systems shall have counterfire capability until 2005.

Problem solving strategy

- **We propose an architecture-driven approach as an effective means to**
  - enhances the interoperability among the C4I systems of ROK.
  - accommodate the incidental requirements quickly.

- **This paper shows the *congruent process, methods and tools* which were used for developing an executable architecture model.**

Study Object

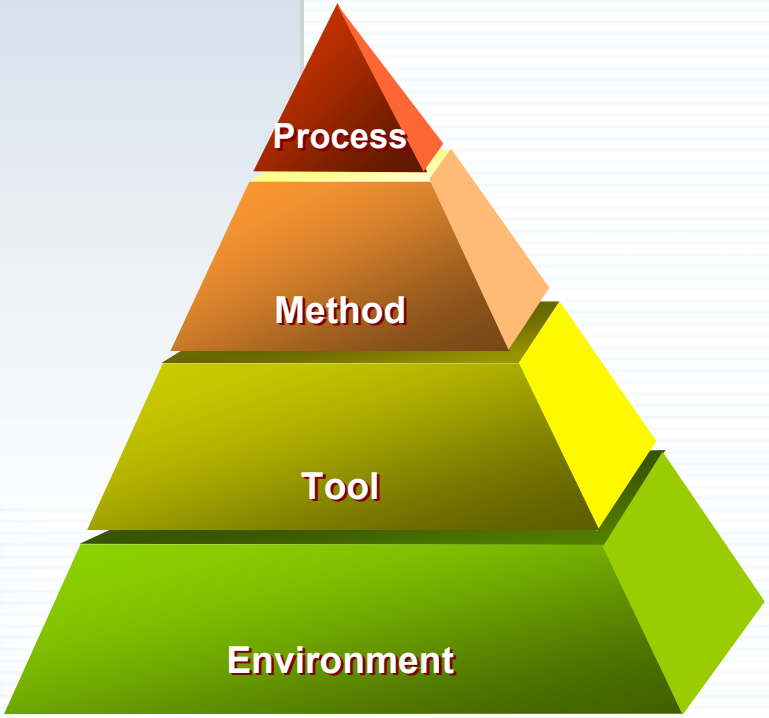

- **J. Armstrong & J. Martin state that the PMTE paradigm is needed to close the gap between '*what*' should be accomplished and '*how*' to accomplish the 'what'.**

- **This study is about the** *Process, Method, and Tool of* **the Architecting Process.**

Study Object : Congruence

Development of *An Integrated Executable C4I Architecture Model Applying Congruent Processes, Methods, and Tools*

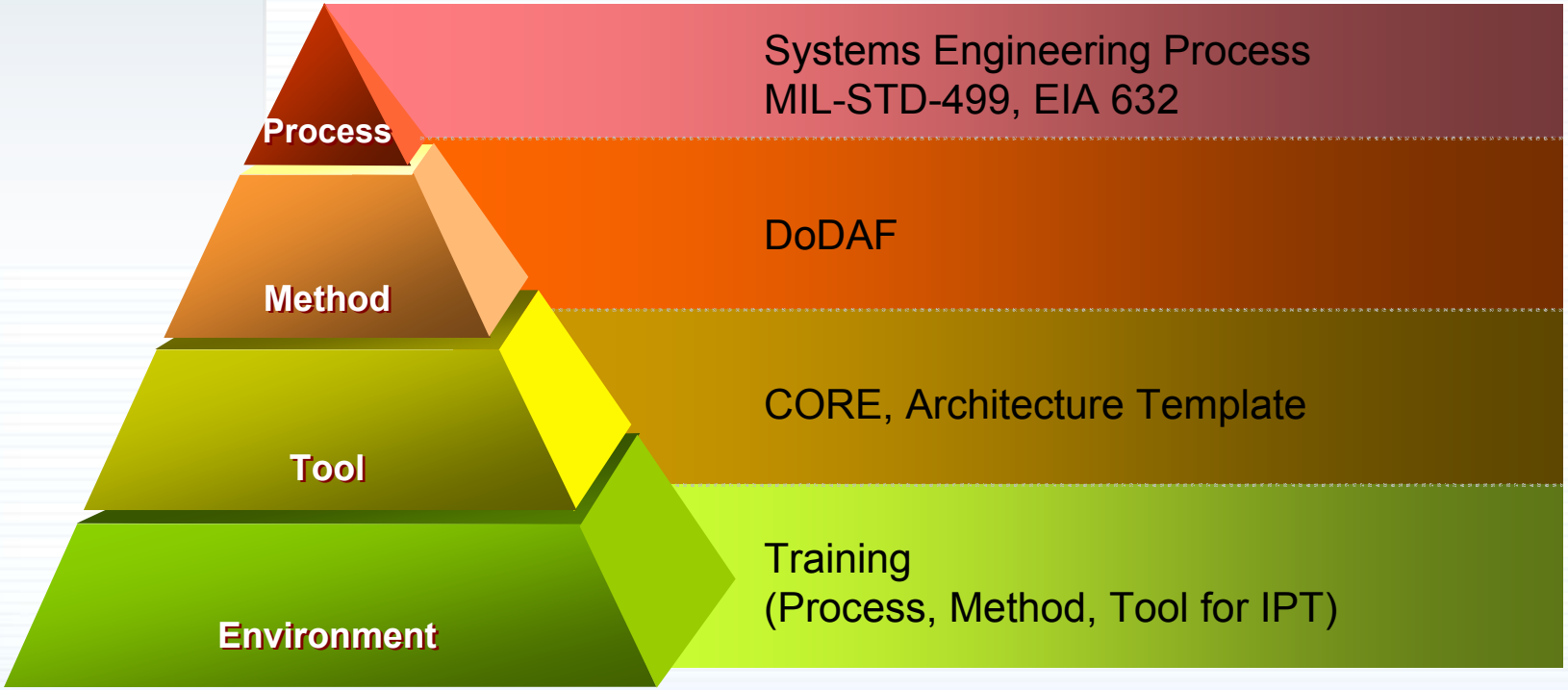

Scope & Purpose

Class	Contents of scope
Mission	Five missions which have significant real time requirements
Time Frame	AS-IS(2000-2007) which include currently developing C4I systems
Organization	Army, Navy, Air Force, and the Joint Chiefs of Staff of ROK
Geography	Korean territory including land, sea, and airspace.
System Context	The warfighter components and JCCS-K of USFK are jointed as external systems.

System Design Process of EIA 632

This study introduced ths system design process of EIA 632 as an architecting process. And use SE philosopy like that the requirement space and solution space shall be devided according to EIA 632

OPERATIONAL REQS. VIEW

SYSTEM VIEW

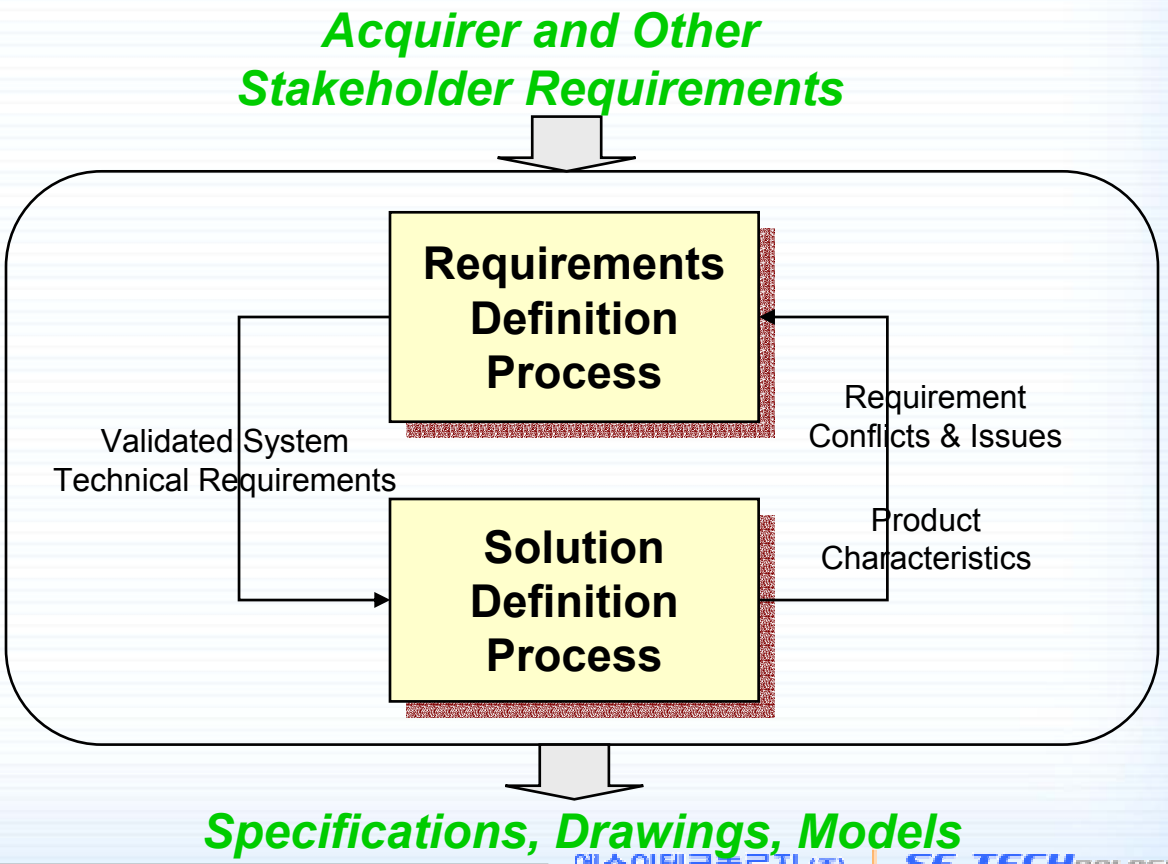

Data-centric system design process

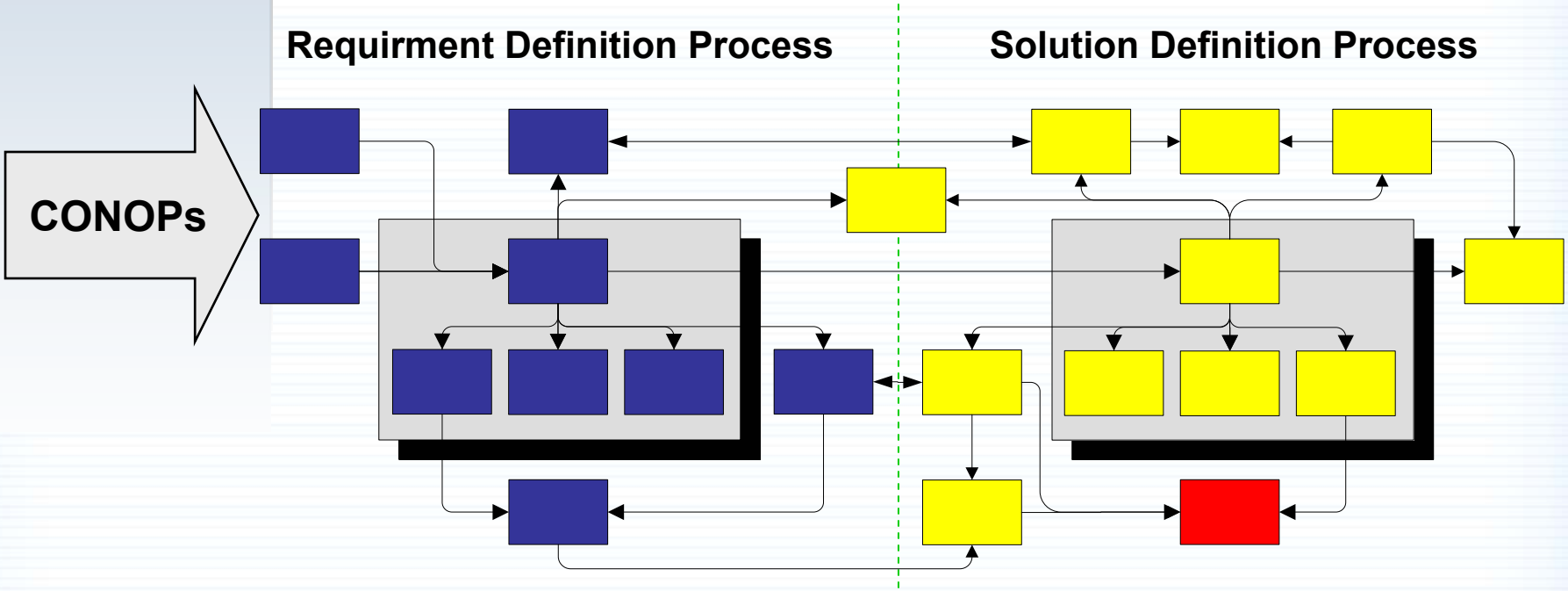

OV **SV**

- An operational concept document can be mapped to the operational view of the architecture.
- A system specification can be mapped to system view of the architecture.

Ref.
Data-centric build sequence of DoDAF

- The product order takes advantage of the related nature of the products and the dependencies among products.
- This chronology does not imply a rigid course of events; however, there is an order of precedence that is required to ensure data integrity.

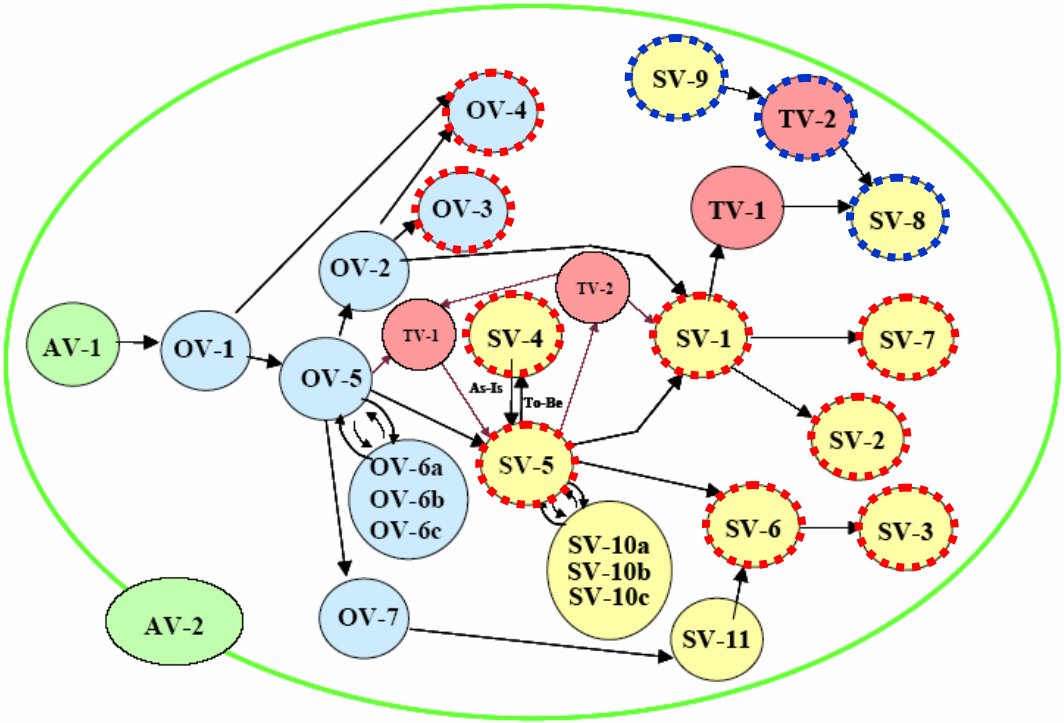

Dotted circles have different sequences in this paper

Integrated nature & Order of precedence

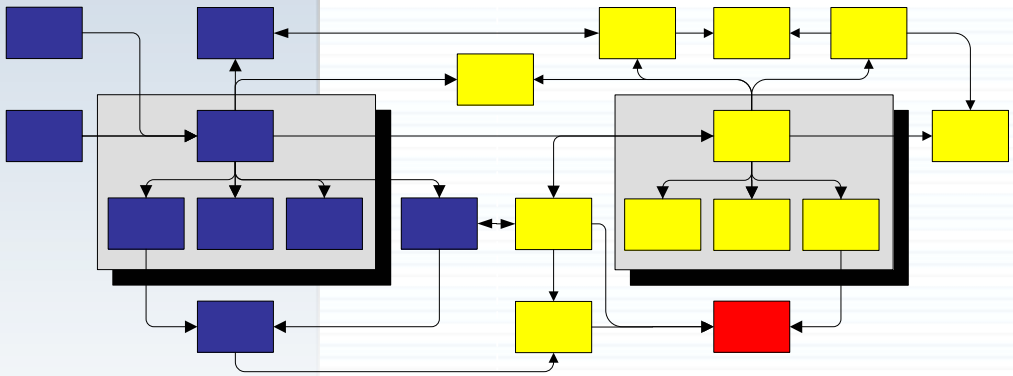

- OV-1 and OV-4 were used as input information, and then the principal products(OV-5 and OV-6) were developed.

- If the principal products were developed first, the other products(OV-2, OV-3, and OV-7) can be developed with little additional effort since the most of operational architecture information is already contained in the principal products.
- Because of these dependencies among products, an integrated capability of architecting tool is important from the view point of consistency and efficiency.
- The OV-5 was used to capture detailed operational requirements and the SV-4 was developed to satisfy the operational requirements of OV-5.
- Developing the principal system architecture products(SV-4 and SV-10) was a major task of system design.
- The SV-5 and SV-6 were used to verify that all the operational requirements were implemented in the system architecture .

Spirally Evolving Architectures

Quote : DoD Architecture Framework Ver.1. Deskbook

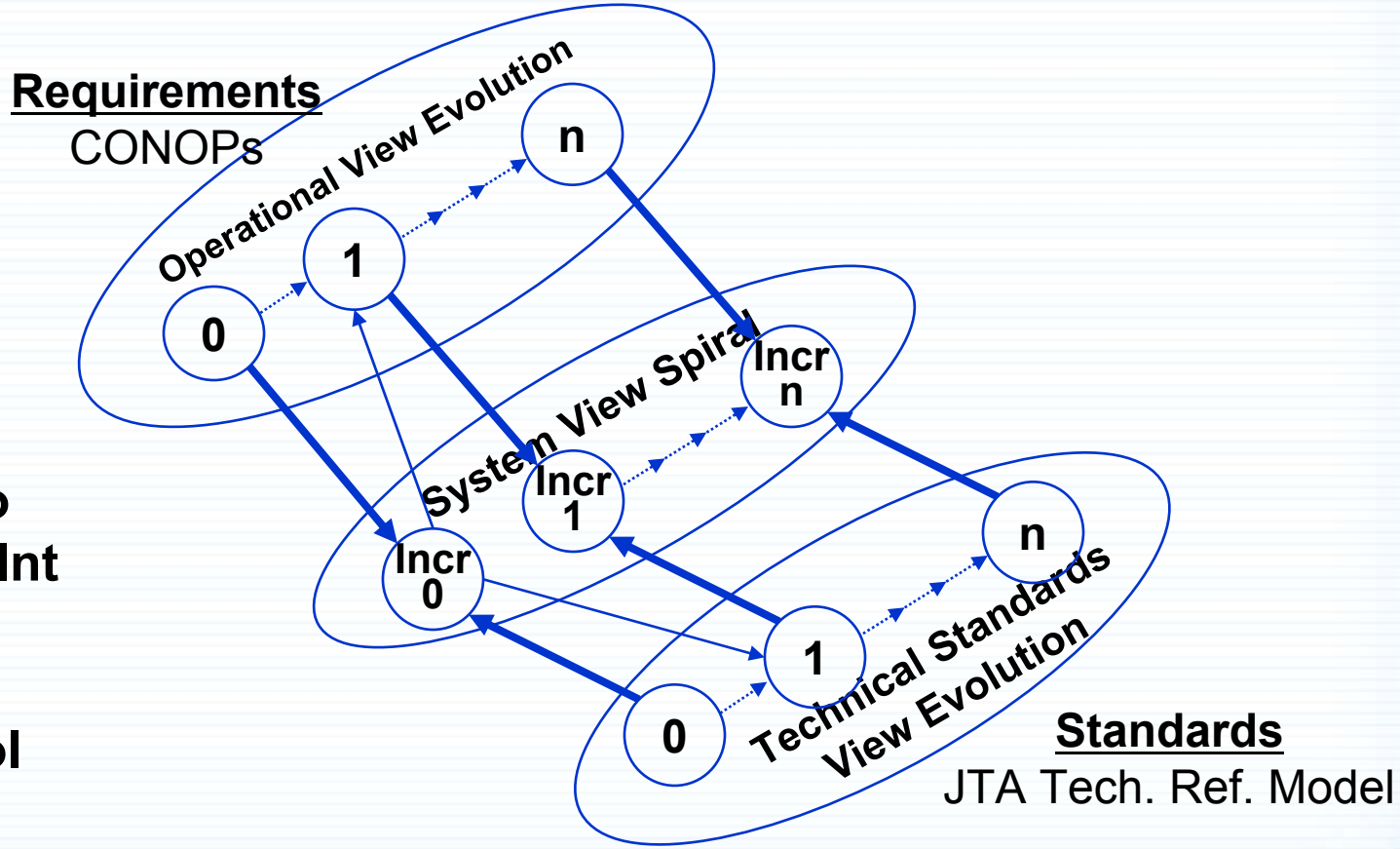

Spirally Evolving to Integrated/Interoperable Command and Control

Spirally Evolving Architectures

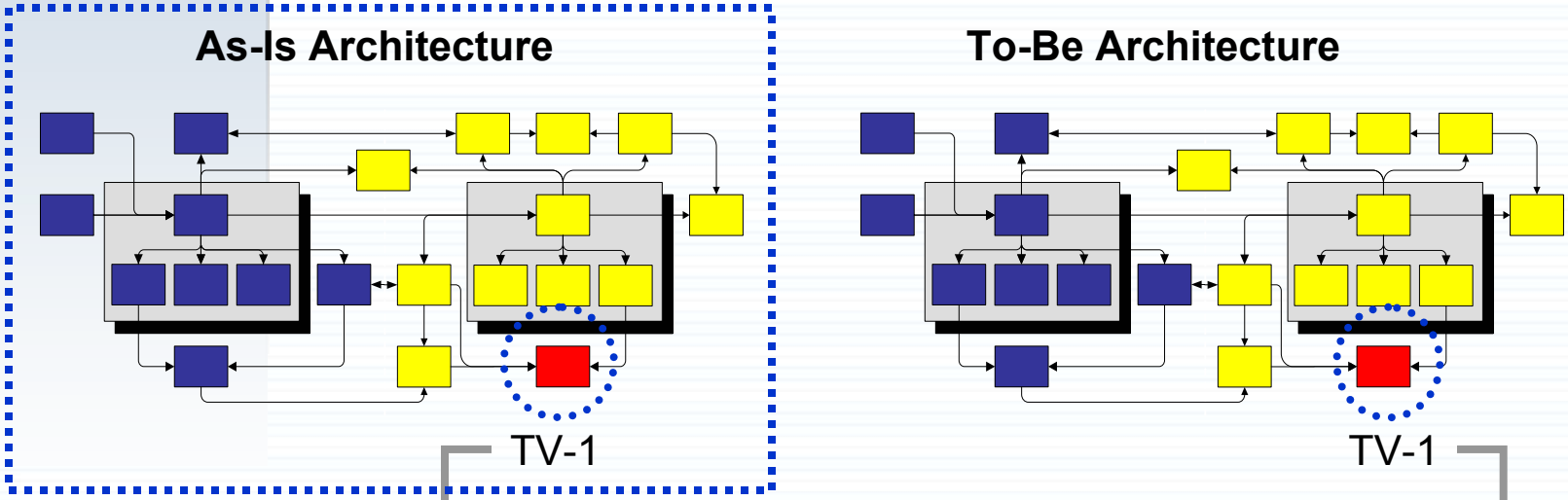

SV-8 System evolution forecast

TV-2 Technical standard forecast

SV-9 System technology forecast

Scope of this project

Product Scope

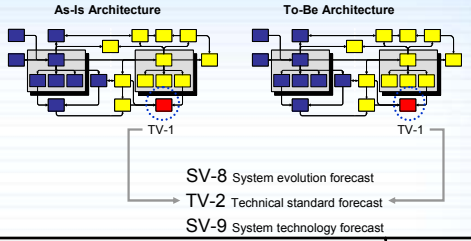

View	Prod. ID	Name	Sel.
AV	AV-1	Overview and Summary Information	O
	AV-2	Integrated Dictionary	O
OV	OV-1	High-Level Operational Concept Graphic	O
	OV-2	Operational Node Connectivity Description	O
	OV-3	Operational Information Exchange Matrix	O
	OV-4	Organizational Relationships Chart	O
	OV-5	Operational Activity Model	O
	OV-6	Operational Activity Sequence and Timing Descriptions	O
	OV-7	Logical Data Model	O
SV	SV-1	Systems Interface Description	O
	SV-2	Systems Communications Description	O
	SV-3	Systems-Systems Matrix	O
	SV-4	Systems Functionality Description	O
	SV-5	Operational Activity to Systems Function Traceability Matrix	O
	SV-6	Systems Data Exchange Matrix	O
	SV-7	Systems Performance Parameters Matrix	X
	SV-8	Systems Evolution Description	X
	SV-9	Systems Technology Forecast	X
	SV-10	Systems Functionality Sequence and Timing Descriptions	O
	SV-11	Physical Schema	O
TV	TV-1	Technical Standards Profile	O
	TV-2	Technical Standards Forecast	X

Exclude To-Be Architecture related products

Tool 1 : Templates for elicitation and communication

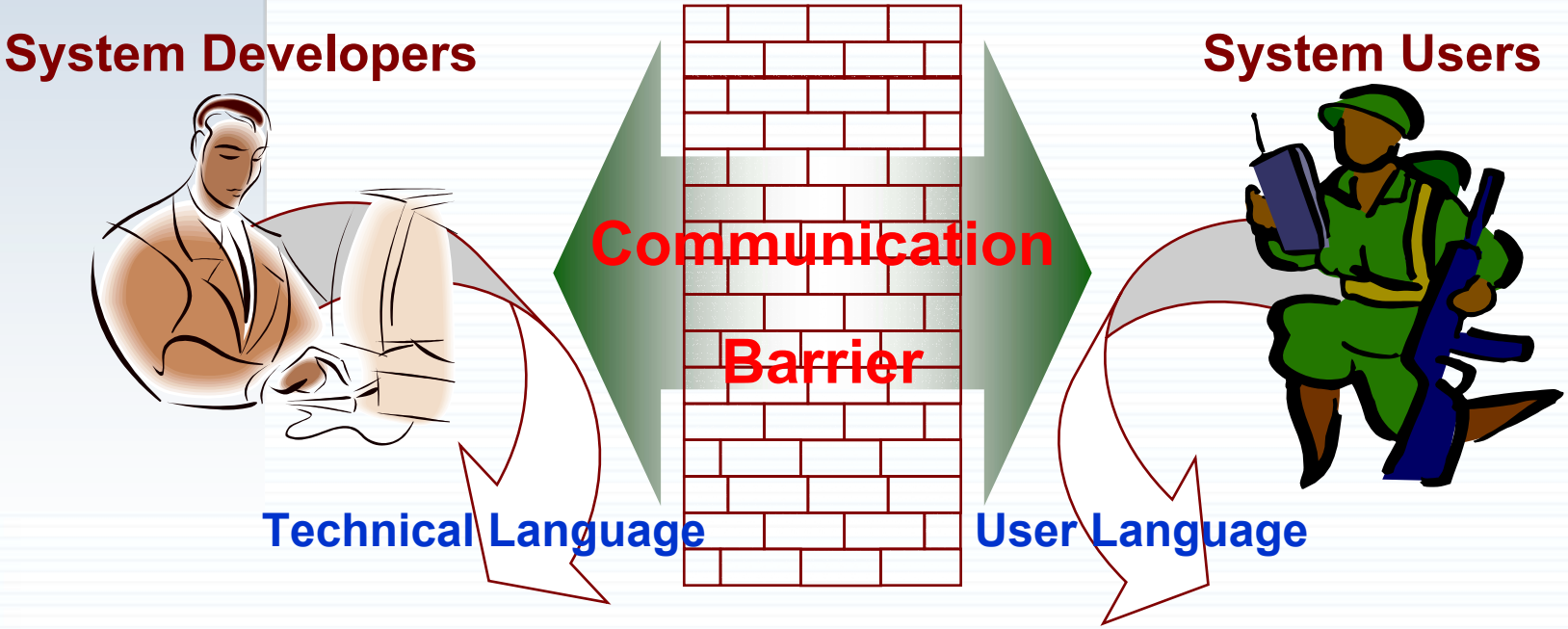

Operational Behavior Data							Operational Information Attribute Data								
When	Who	What (I.O)	What (D.O)	How	Verb	Proces. Time (Sec)	Language	Trans. Type	Periodicity	Timeliness (Sec)	Integrity Check	Secu. Level	Secu. Type	Disemin. Ctrl	LISI
T1						60	K/E	Direct	NS	60	1	2	6	OCC	2
T2						30	K/E	Direct	NS	30	1	2	6	OCC/FSC	3
T3														-	-
T4														-	-
T5														SOC	2
T6														ATKer	2
T7														-	-
T8						10	K/E	Direct	NS	10	1	2	6	OCC/FSC	2

ELICITATION & COMMUNICATION Templates

OA Template

An operational architecture template with elicited data

Operational Behavior Data							Operational Information Attribute Data								
When	Who	What (I.O)	What (D.O)	How	Verb	Proces. Time (Sec)	Language	Trans. Type	Periodicity	Timeliness (Sec)	Integrity Check	Secu. Level	Secu. Type	Disemin. Ctrl	LISI
T1						60	K/E	Direct	NS	60	1	2	6	OCC	2
T2						30	K/E	Direct	NS	30	1	2	6	OCC/FSC	3
T3						10	-	-	-	-	-	-	-	-	-
T4						10	-	-	-	-	-	-	-	-	-
T5						10	K/E	Direct	NS	10	1	2	6	ASOC	2
T6						10	K/E	Direct	NS	10	1	2	6	X-ATKer	2
T7						60	-	-	-	-	-	-	-	-	-
T8						10	K/E	Direct	NS	10	1	2	6	OCC/FSC	2

CLASSIFIED

Op. Behavioral Requirement

4W1H1V Method

Operational behavior description method

Reveal operational behaviors and interact items

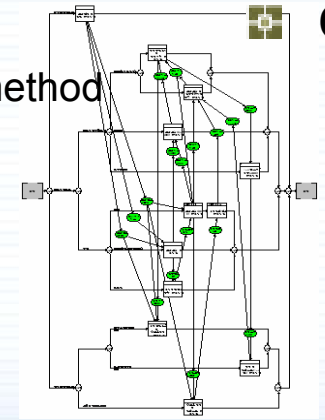

Op. Informatin Attribute Data

Process time, Language, Transaction type, Periodicity, Timeliness, Integrity, Security level, Security type, Dissemination control, Target LISI

SA Template

A system architecture template filled with system architecture data

System Function Data						System Information Attribute Data												
When	Who	What (I.O)	What (D.O)	How	Verb	Proces. Time (Sec)	Language	Media Type	Size	Unit	Trsct. Type	Periodicity	Timeliness	Integrity Check	Secu Levl	Secu Type	Dissemin. Ctrl.	LISI
T1						50	K/E	TEXT	40	Kb	Direct	NS	50	1	2	6	ArmyC4I	2
T2						2	K/E	TEXT	40	Kb	Direct	NS	50	1	2	6	ArmyC4I	2
T3						10	-	-	-	-	-	-	-	-	-	-	-	-
T4						1	K/E	TEXT	40	Kb	Direct	NS	1	1	2	6	KJCCS	3
T5						1	K/E	TEXT	40	Kb	Direct	NS	1	1	2	6	KJCCS	3
T6						2	-	-	-	-	-	-	-	-	-	-	-	-
T7						1	K/E	TEXT	40	Kb	Direct	NS	1	1	2	6	KJCCS	3

CLASSIFIED

System Functions

4W1H1V Method

System function description method

Reveal system functions and interact items

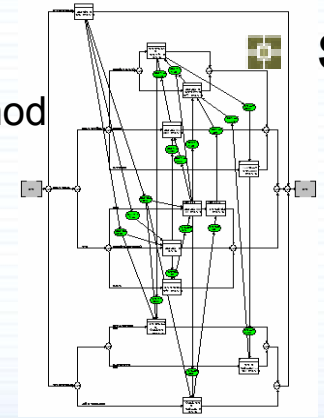

System IER Data

Process time, Language, Transaction type, Periodicity, Timeliness, Integrity, Security level, Security type, Dissemination control, Target LISI

Tool 2 : CASysA Tool- CORE®

- **We used the CORE® of the Vitech Corp. as a tool.**
- **From DoDAF "*Executable architecture*" refers to the use of dynamic simulation software to evaluate architecture models.**
- **The CORE® has the capability to build executable architecture models. The following objectives can be achieved using CORE®,**

CORE

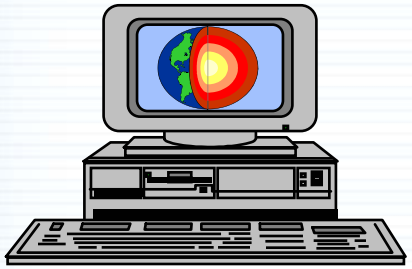

(1) The architecture model itself can be verified for internal self-consistency.
(2) Operational concepts can be simulated, observed dynamically, verified and refined.
(3) Operational plans can be examined and assessed.
(4) Tradeoffs between systems can be assessed.
(5) Architecture measures can be evaluated (given that metrics have been defined), which can support cost-benefit analyses and quantitative acquisition decisions.

An example of architecting template and model

e.g. : Op. activity and Op. IERs(OV-3)

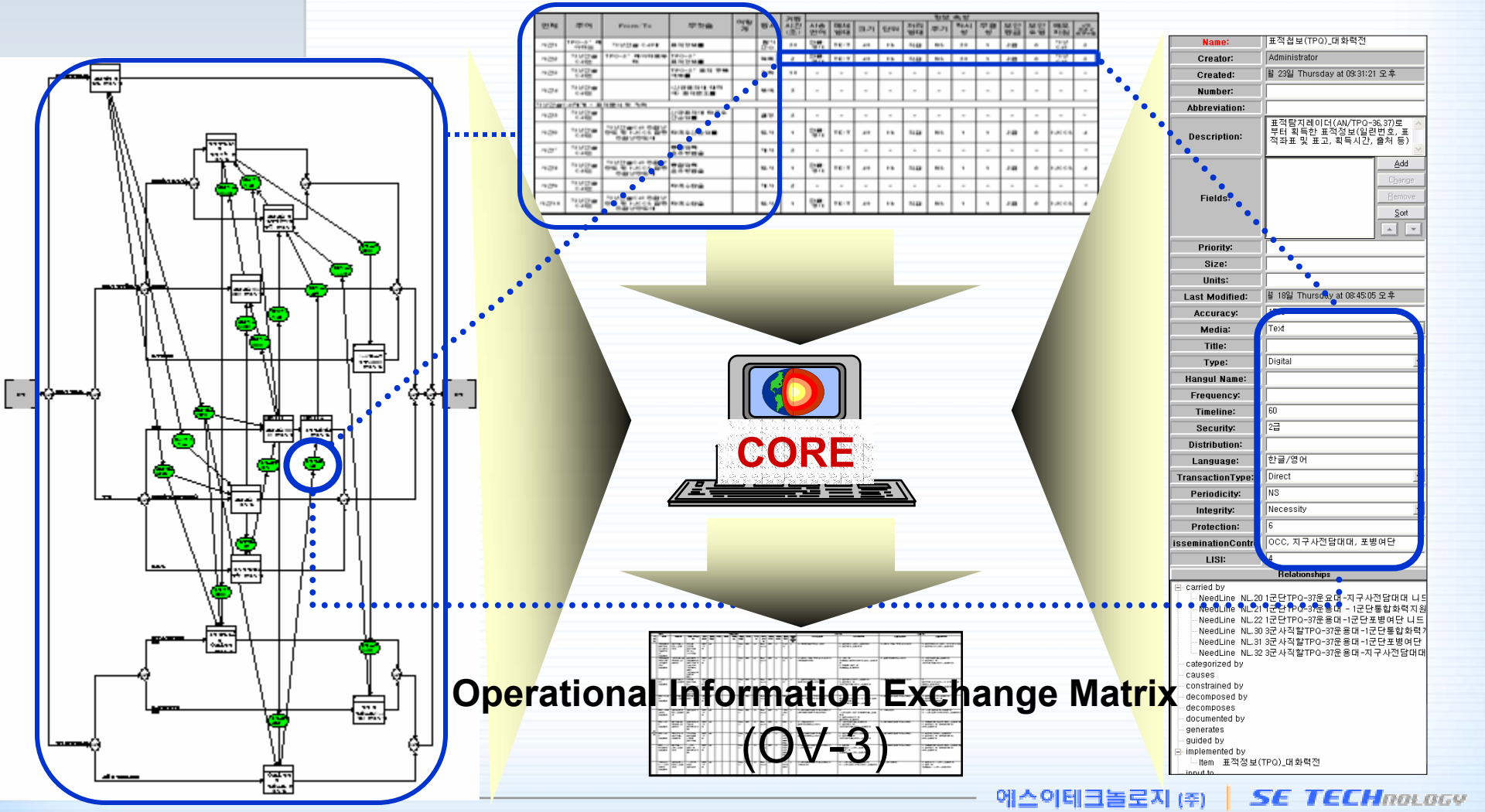

Operational Activity Model

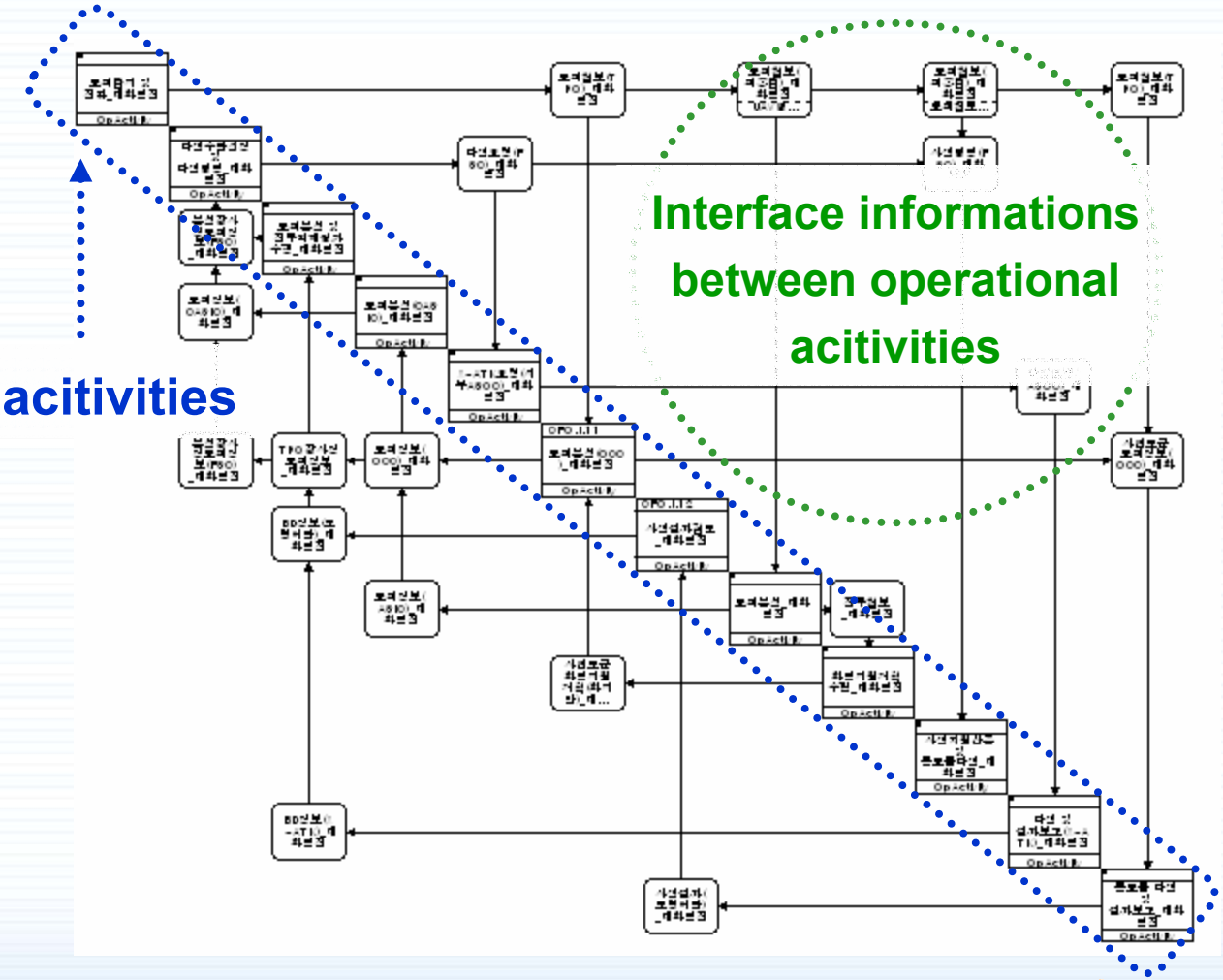

BPR

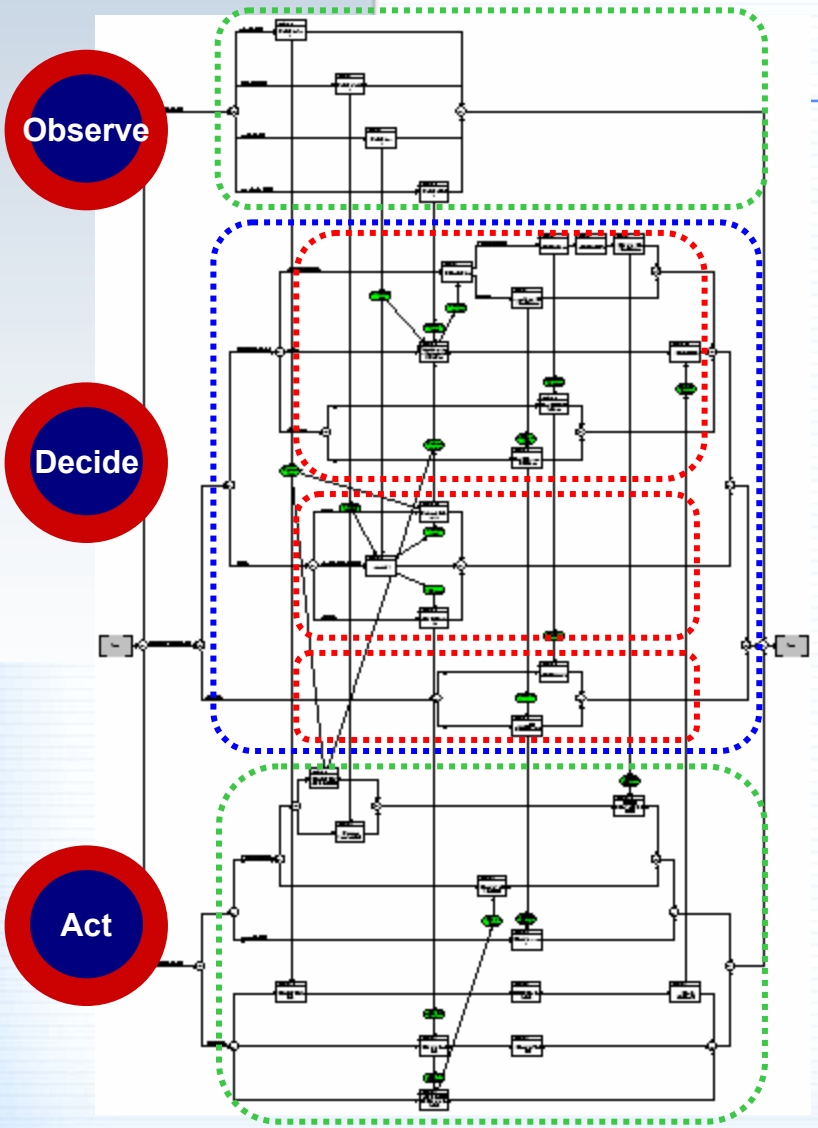

•*Operational Effectiveness Analysis*

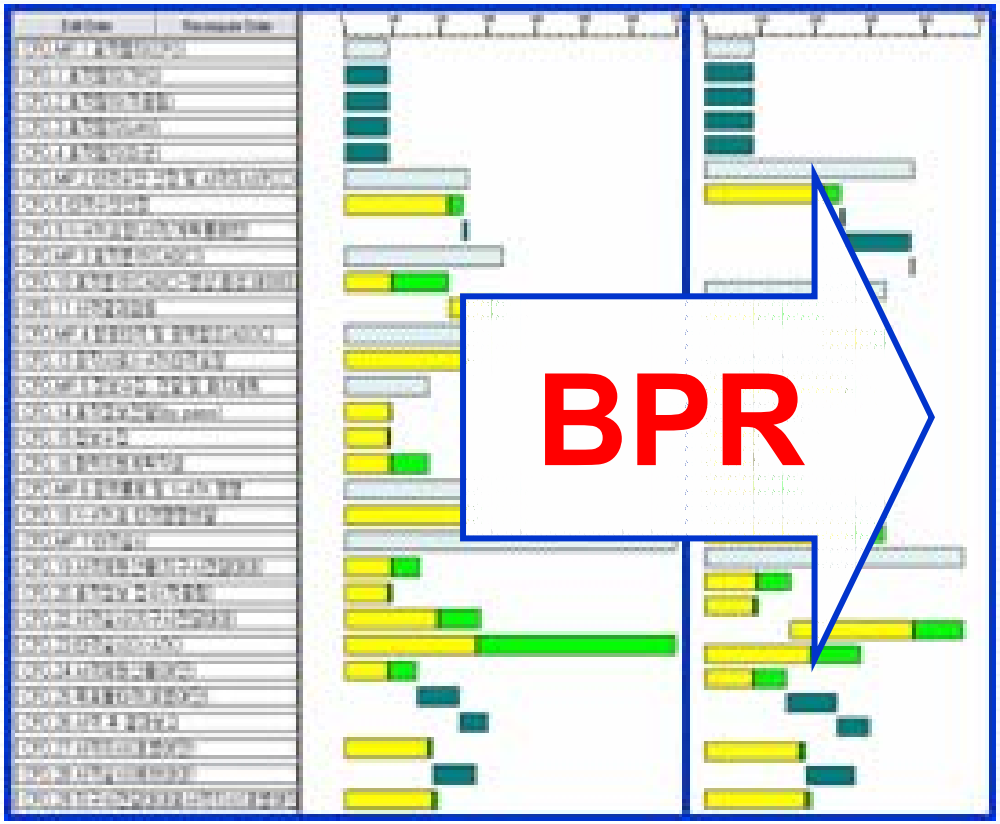

Time to Readyness

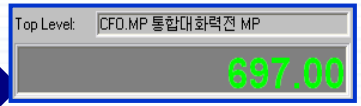

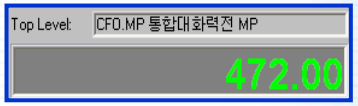

Readyness : XX min. X min.

Operational Node Connectivity Description(OV-2)

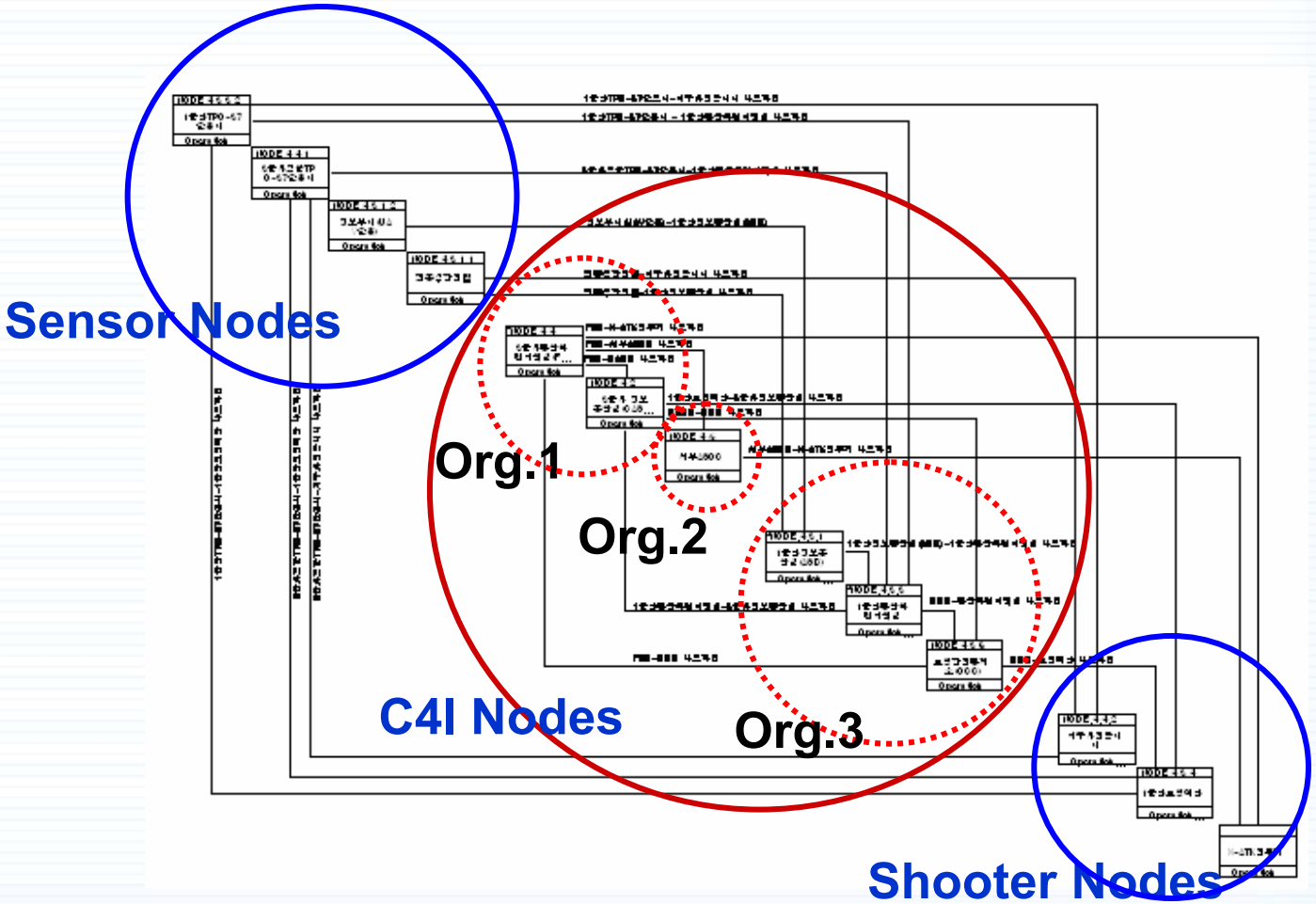

Architecture Elements Alignment

quote: http://www.coolheads.com/egov/securebiz/topicmap/s563/img17.html
USAF. HQ, Actionable Architectures: Out of the Box with Smart Practices, 2003.04.

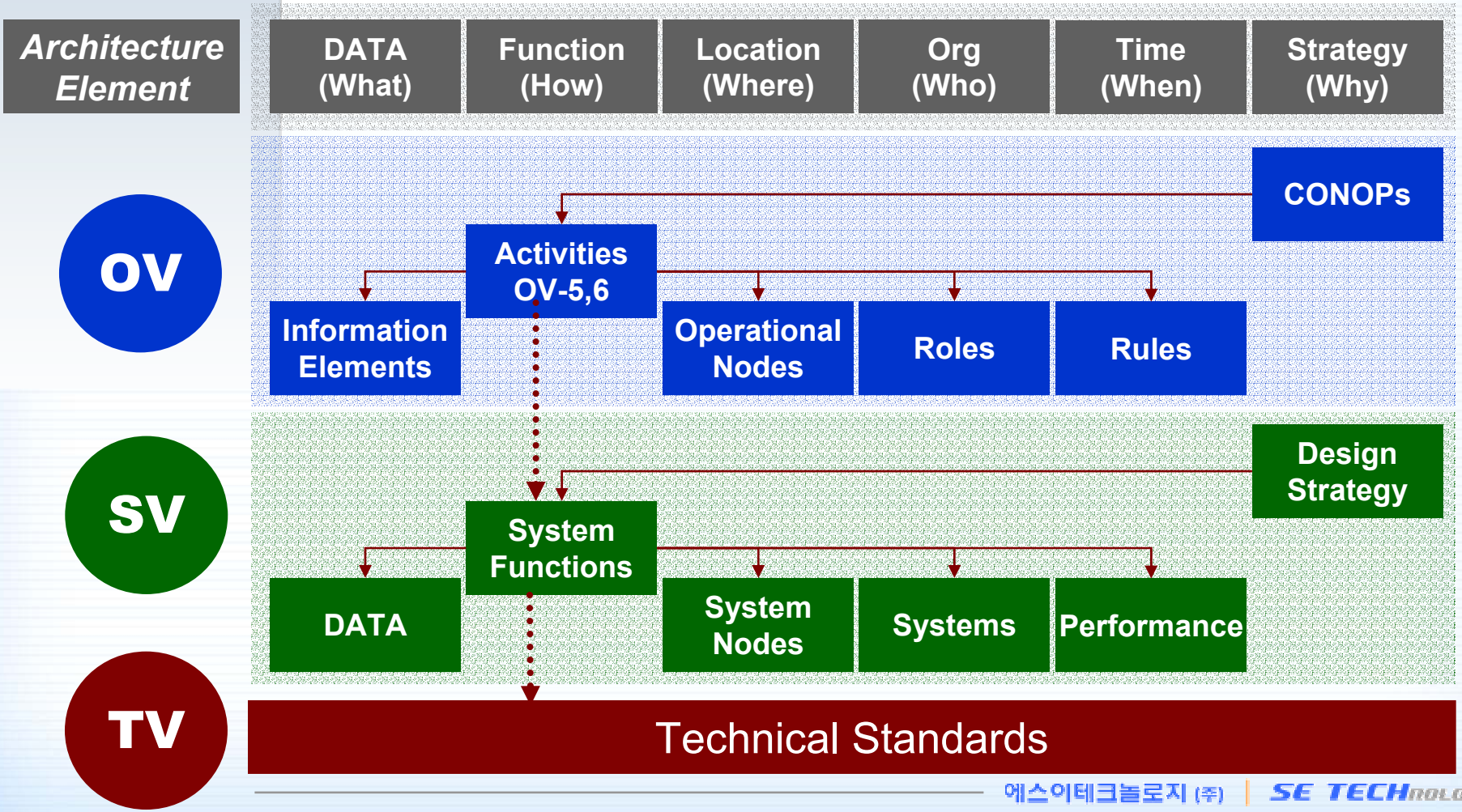

Alignment

Operaional Model

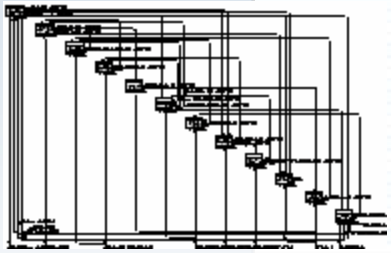

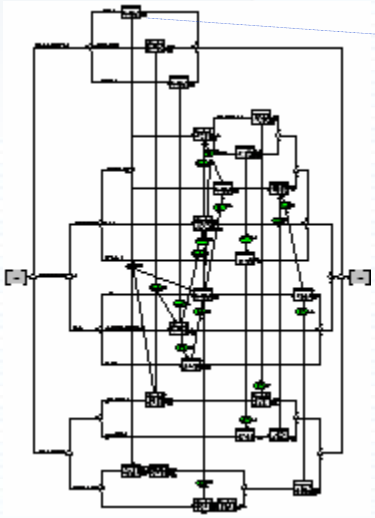

Op. Activities vs. System Funcitons
(SV-5)

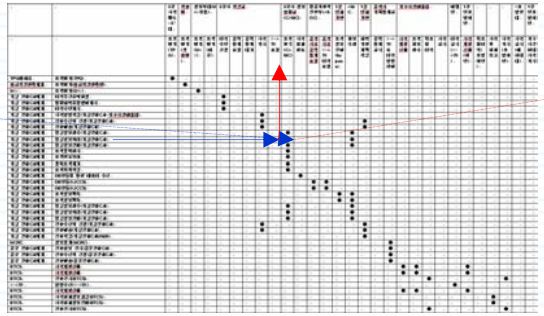

System Model

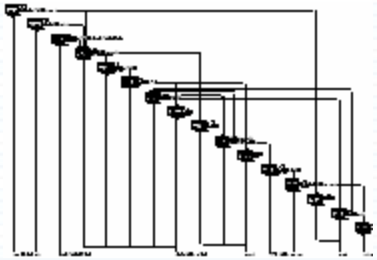

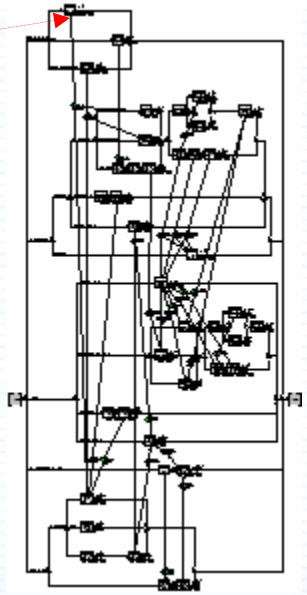

Architecting Process

1 Stakeholders Concepts

OPLAN

2 Gather & Refine using OA Template

System Function Data							System Information Attribute Data												
Vhat	Vho	From/To	Vhat	How	Verb	Proces. Time (Sec)	Language	Media Type	Size	Unit	Trsct. Type	Periodicity	Timeliness	Integrity Check	Secu Level	Secu Type	Dissemin Ctrl.	LDI
T1						50	K/E	TEXT	40	Kb	Direct	NS	50	1	2	6	ArmyC4I	3
T2						2	K/E	TEXT	40	Kb	Direct	NS	50	1	2	6	ArmyC4I	3
T3						10	-	-	-	-	-	-	-	-	-	-	-	-
T4						1	K/E	TEXT	40	Kb	Direct	NS	1	1	2	6	KJCCS	4
T5						1	K/E	TEXT	40	Kb	Direct	NS	1	1	2	6	KJCCS	4
T6						2	-	-	-	-	-	-	-	-	-	-	-	-
T7						1	K/E	TEXT	40	Kb	Direct	NS	1	1	2	6	KJCCS	4

3 Modeling and Simumation OA using CORE®

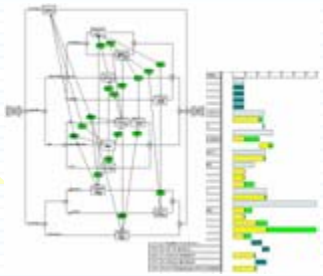

4 OV Product Output

System Developers

5 Gather & Refine using SA Template

System Function Data							System Information Attribute Data											
When	Who	From/To	What	How	Verb	Proces. Time (Sec)	Language	Media Type	Size	Unit	Trsct. Type	Periodicity	Timeliness	Integrity Check	Secu Level	Secu Type	Dissemin Ctrl.	LDI
T1						50	K/E	TEXT	40	Kb	Direct	NS	50	1	2	6	ArmyC4I	3
T2						2	K/E	TEXT	40	Kb	Direct	NS	50	1	2	6	ArmyC4I	3
T3						10	-	-	-	-	-	-	-	-	-	-	-	-
T4						1	K/E	TEXT	40	Kb	Direct	NS	1	1	2	6	KJCCS	4
T5						1	K/E	TEXT	40	Kb	Direct	NS	1	1	2	6	KJCCS	4
T6						2	-	-	-	-	-	-	-	-	-	-	-	-
T7						1	K/E	TEXT	40	Kb	Direct	NS	1	1	2	6	KJCCS	4

6 Modeling and Simumation SA using CORE®

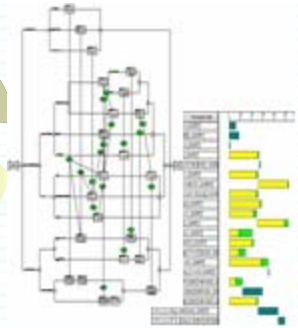

7 SV Product Output

Architecting Process Using Templates

A.Templates can be used as communication tool

- *Between stakeholders and system engineers.*
- *Between system engineers and CaSysE Tool.*

A. Templates can decrease the rework very effectively.

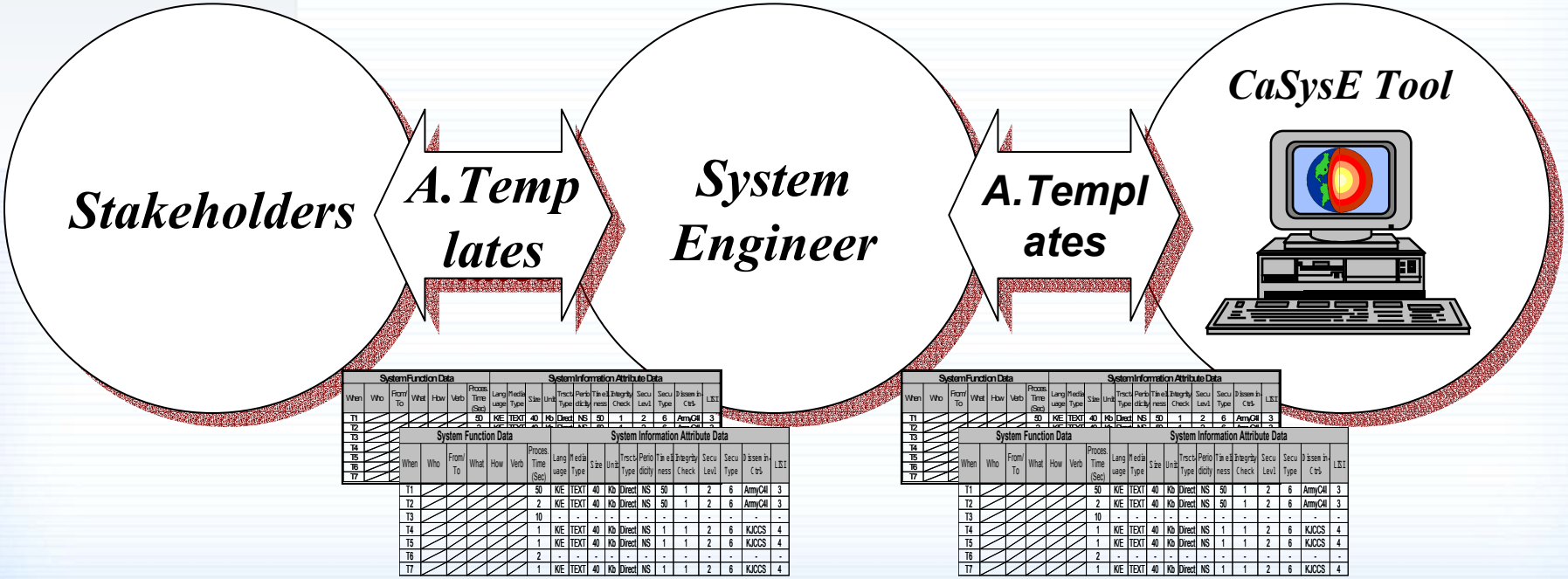

Summary

Process

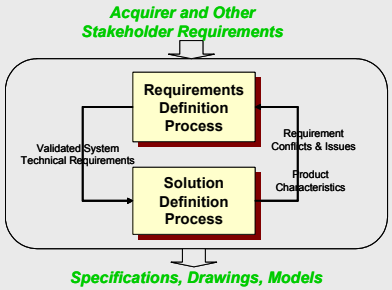

Supported by

Method

- Defined sequence
- Op. Architecture Template Using Methods
- Sys. Architecture Template Using Methods

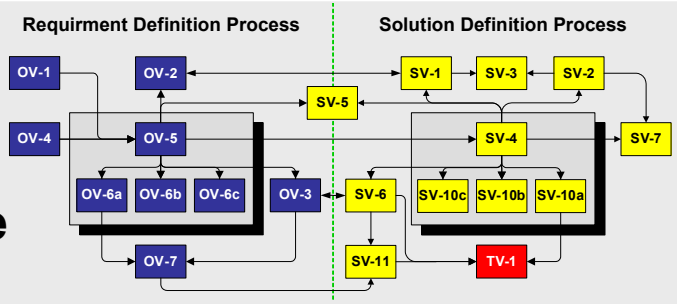

Supported by

Tools

CaSysE Tool

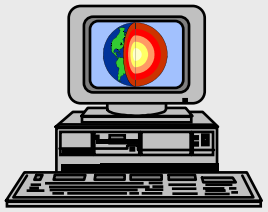

Architecting Templates

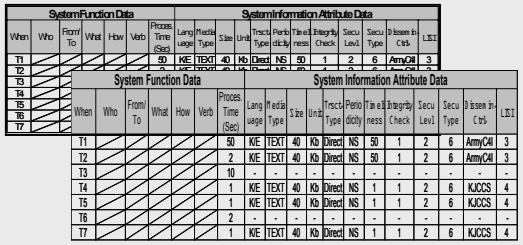

System Function Data / System Information Attribute Data

	When	Who	From/ To	What	How	Verb	Process. Time (Sec)	Lang uage	Media Type	Size	Unit	Trsct Type	Perio dicity	Tim eli ness	Integrity Check	Secu Lev1	Secu Type	Dissem in Ctrls	LSI
T1							50	K/E	TEXT	40	Kb	Direct	NS	50	1	2	6	ArmyCI4	3
T2							2	K/E	TEXT	40	Kb	Direct	NS	50	1	2	6	ArmyCI4	3
T3							10	-	-	-	-	-	-	-	-	-	-	-	-
T4							1	K/E	TEXT	40	Kb	Direct	NS	1	1	2	6	KJCCS	4
T5							1	K/E	TEXT	40	Kb	Direct	NS	1	1	2	6	KJCCS	4
T6							2	-	-	-	-	-	-	-	-	-	-	-	-
T7							1	K/E	TEXT	40	Kb	Direct	NS	1	1	2	6	KJCCS	4

Results

- **This paper introduced congruently integrated *process, methods, and tools* for architecture model development.**
  - The system design process of EIA 632,
  - The DoDAF was used as a method to implement the process.
  - As an architecting tool, the architecture templates and specialized systems engineering tool CORE® were used.
- **The *operational architecture template* was effective**
  - in eliciting requirements,
  - to reduce requirement fluctuation, and
  - to adopt incident requirements quickly.
- **Due to the integrated architecture capability of CORE®**
  - the architecture development effort was reduced.
- **Due to the executable architecture capability of CORE®,**
  - the performance of an architecture was enhanced.
- **The congruently integrated *process, method, and tools* were effective and efficient**
  - in solving interoperability problems by identifying IERs and
  - in delivering key interface requirements and key functional performance requirements to each system of warfighter domain.
- **Finally, the interoperability level 3(LISI 3) of C4ISR systems was assured from the architecture model demonstration.**