Evaluation of Net-Centric Command & Control via a Multi-Resolution Modeling Evaluation Framework

Paul D. North
Paul.North@jhuapl.edu

Steven L. Forsythe
Steven.Forsythe@jhuapl.edu

Valerie B. Barnes
Valerie.Barnes@jhuapl.edu

Johns Hopkins University Applied Physics Laboratory

10th International Command and Control
Research and Technology Symposium

Multi-Resolution Modeling for C2 Evaluation

- Transformation requires informed decision makers
  - » Cost/benefit tradeoffs within the C2 space
  - » Cost/benefit tradeoffs between DoD programs
- Challenge:
  - » To qualitatively and quantitatively evaluate the effectiveness of net-centric C2
  - » To combine those results with service life cycle costs

We need to be able to estimate the improvement in military outcomes due to potential improvements in C2.

C2 Processes Exist in a Hybrid Architecture Environment

Existing and evolving C2 processes must interoperate in hybrid environments, which are:

- Legacy Platform-Centric:
  - System or Systems-of-Systems Oriented Architectures
  - Stovepipe Characteristics; Low Interoperability
  - Limited Standards
  - Un-tagged Data
  - More Traditional TPED Approach
  - Multi-networked; Point-to-point Connections

- Net-Centric:
  - Service Oriented Architectures
  - Core Services (NCES)
  - Service Interoperability
  - Well-defined Standards
  - Meta-tagged Data
  - Defined Ontology
  - Information Exchange Cultural Shift (Power to the Edge; TPPU)
  - Global Information Grid (GIG)

APL C2 Evaluation Approach

Step 1: **Define Scenario and Metrics**: Develop or leverage existing scenarios to bound the evaluation problem. Develop a set of metrics to measure the performance of the net-centric C2 services to be evaluated.

Step 2: **Laboratory Simulation**: In the context of a scenario, evaluate C2 processes and net-centric services via constructive and virtual modeling & simulation.

Step 3: **Live Simulation**: Deploy and evaluate net-centric services from one or more portfolios via live simulation in an exercise/experimentation environment.

Step 4: **Assess Cost and Options**: Combine technical evaluation results with expected deployment and operations & maintenance costs for each portfolio; compare portfolio offerings.

Multi-resolution Modeling Evaluation Framework

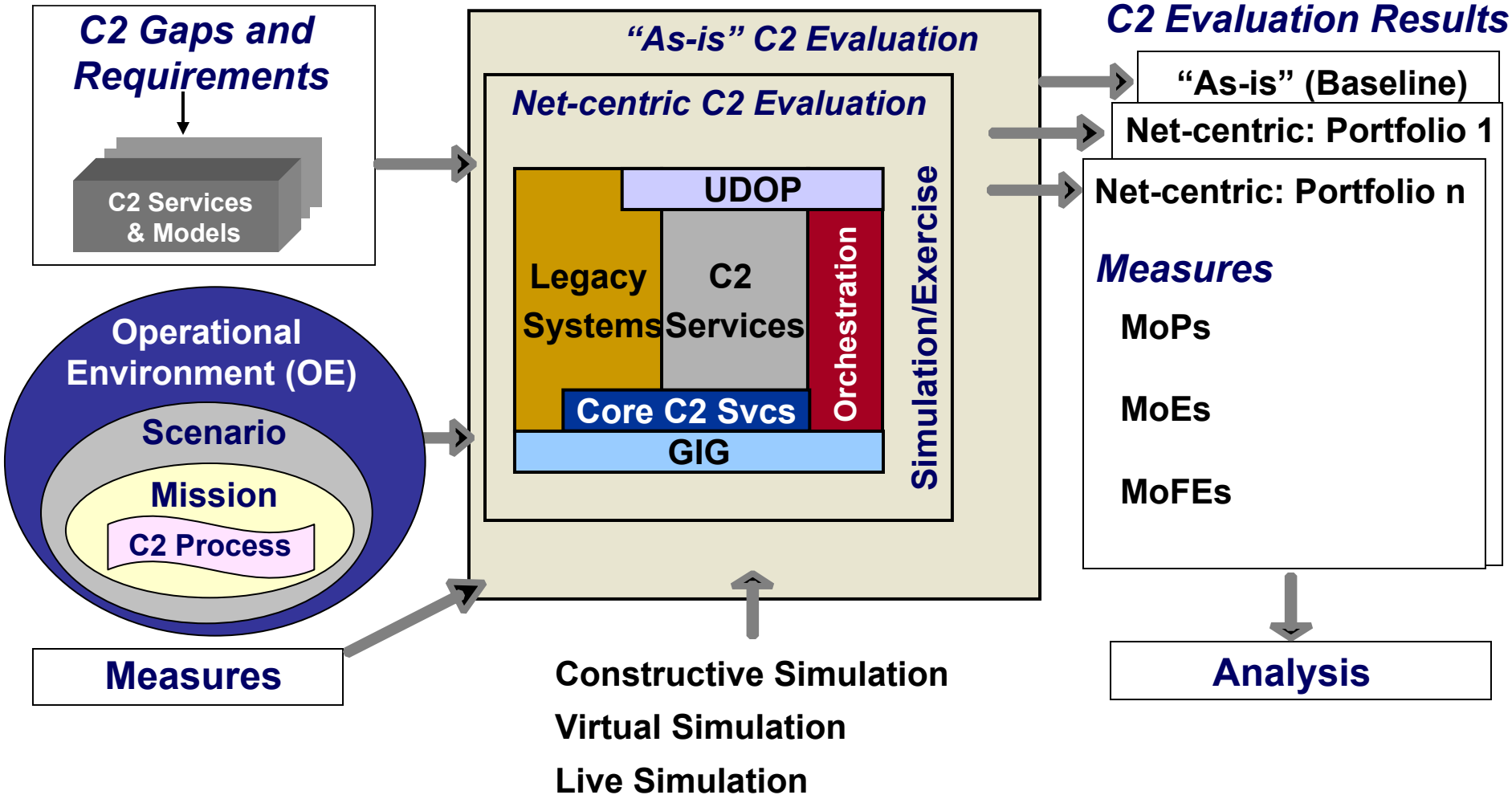

Step 1: Define Scenario and Metrics

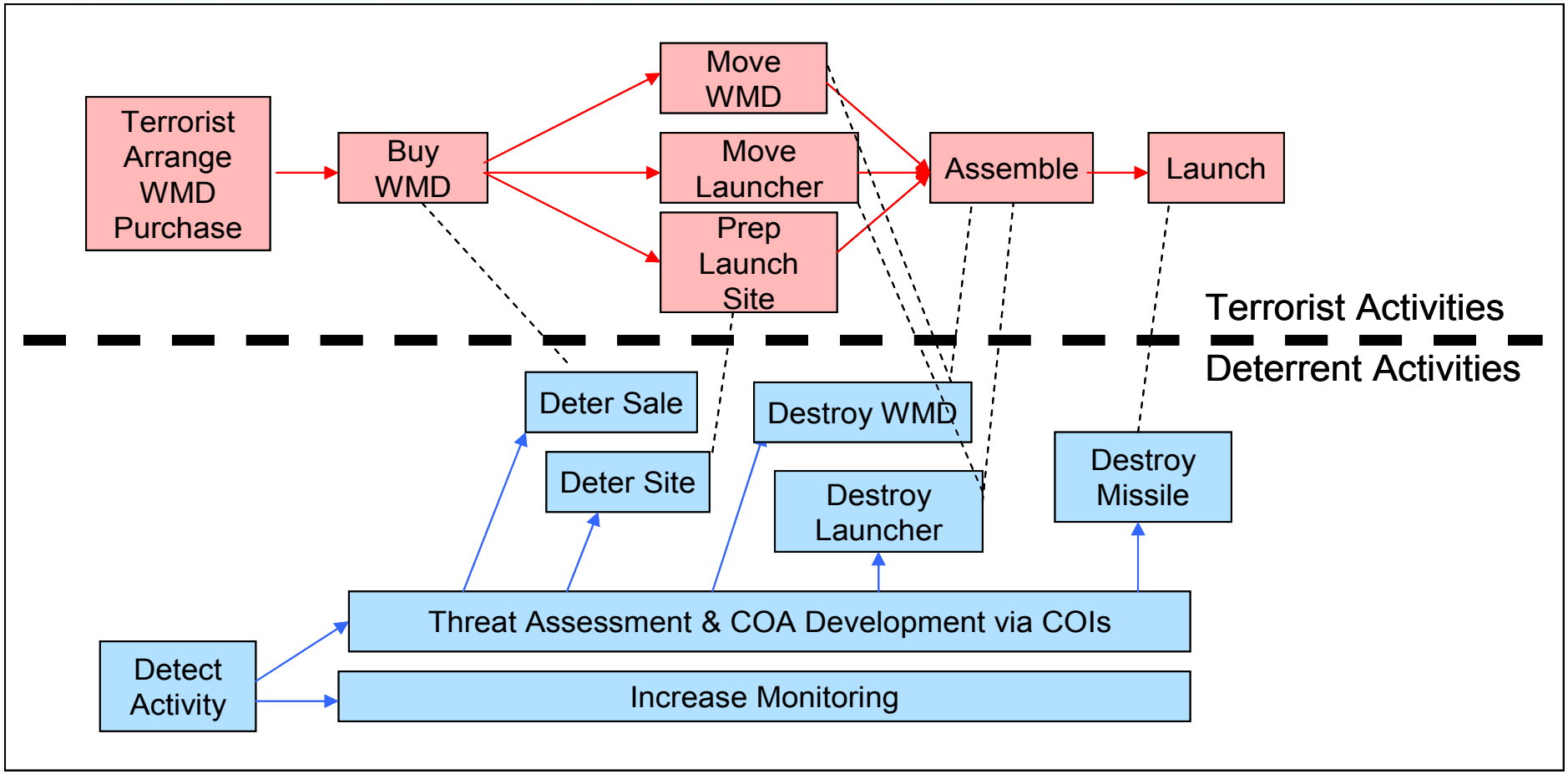

- Measures of Force Effectiveness (MoFEs) are the ultimate measures of military success or failure
- Measures of Effectiveness (MoEs) measure direct impact
- Measures of Performance (MoPs) measure the system characteristics

Step 2: Laboratory Simulation

- Constructive Simulation
  - » Low fidelity
  - » Exploratory analysis
  - » Identify key factors
- Virtual Simulation
  - » “In-the-loop” H/W, S/W, or people
  - » Higher fidelity sub-modules
  - » Compare and analyze the net-centric MoPs, MoEs, and MoFEs of that evaluation
  - » Provide feedback to constructive simulation parameters and assumptions

Step 3: Live Simulation

- Identify an appropriate exercise/experimentation environment
- Develop a plan to deploy and evaluate the net-centric services from each portfolio in that environment
- For each portfolio of services
  - » Execute the scenario as a live simulation, which includes people, real services, & the GIG
  - » Compare and analyze the net-centric MoPs, MoEs, and MoFEs of that evaluation against the baseline data
  - » Generate recommendations

Step 4: Assess Cost and Options

- For each portfolio, combine technical evaluation results with life cycle costs
- Perform a trade study to determine which portfolio offers the best service performance benefit based on the technical-to-cost tradeoffs

- Identify the best-of-breed choices
- Identify poor choices

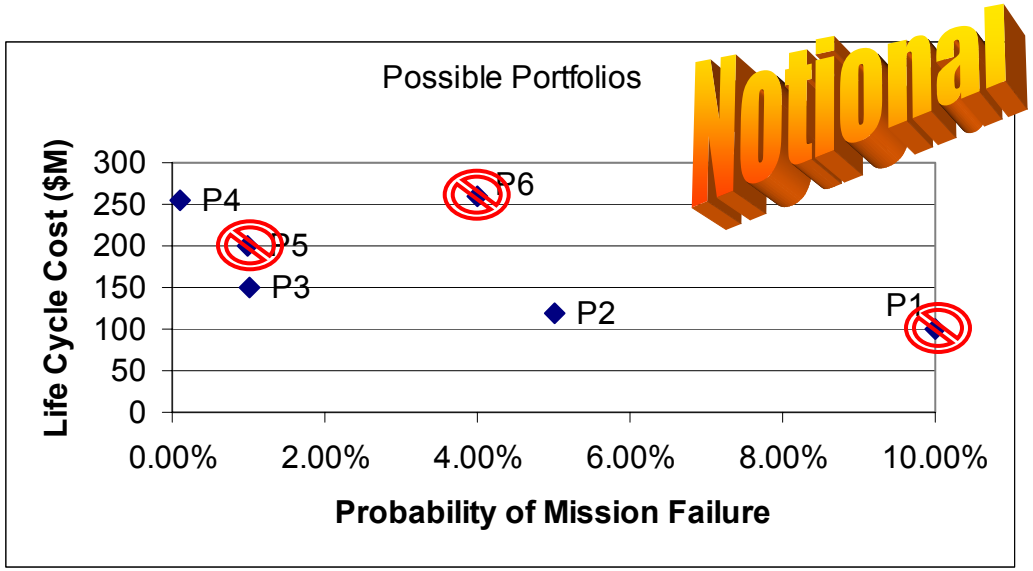

Way-ahead for FY05

- Demonstrate Multi-resolution Modeling Evaluation Framework concepts via a prototype to evaluate selected C2 capabilities
  - » Focus on smart agent search and provisioning support for dynamically created communities of interest
- Prototype approach (Step 1)
  - » Develop a scenario based on the sale of a weapon of mass effect (WME) to a terrorist organization - completed
  - » Develop a set of metrics to evaluate the performance of the smart agent search and provisioning capabilities – in progress

Way-ahead for FY05 (continued)

- Prototype approach (Step 2)
  - » Current C2 – in progress
    - Develop a low-fidelity simulation of the current (as-is) C2 collaboration processes in the context of the scenario.
    - Measure performance via the metrics defined above using a simulation tool such as Arena
  - » Net-Centric C2
    - Modify the low-fidelity simulation to reflect the net-centric environment augmented by smart agent search and provisioning capabilities.
    - Measure performance via the metrics defined above in a simulation environment that includes the smart agent capabilities.
  - » Compare the results of the two simulations
    - Qualitative assessment
    - Quantitative assessment

Multi-resolution Modeling Enables Net-Centric C2 Evaluation

- Better informed architectural and deployment decisions by DoD managers
- Increased return on investment via reduced operations and maintenance costs
- Enhanced best-of-breed selection among competing portfolio capabilities
- Improved techniques, tactics, and procedures and concepts of operations via in-the-loop resource experimentation
- Reduced deployment risks

Questions?