Program Executive Office
C4I and Space

Global Command and Control System – Maritime (GCCS-M) Segments

And SkyCAP Assured IP Software

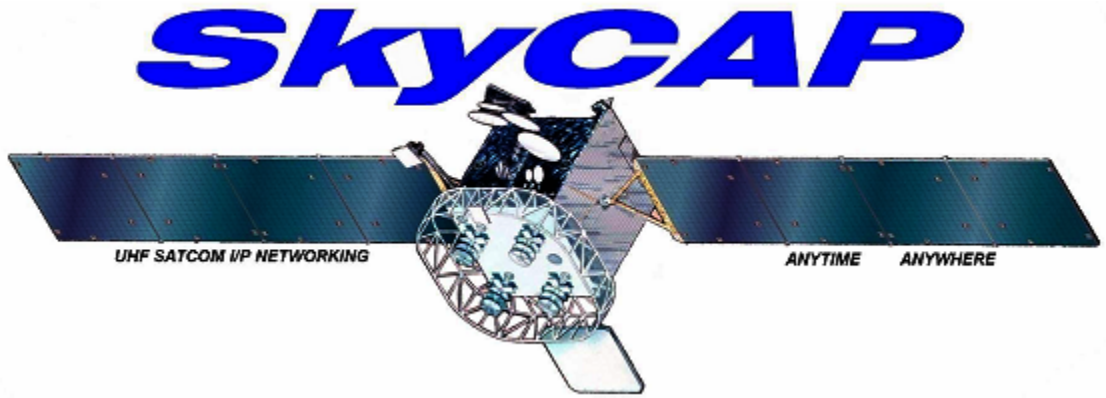

10th ICCRTS

13 June 2005

Alfred Mitchell
SAIC
Senior Systems Engineer

Charles Gooding
PMW-170-CG
UHF Systems APM

What is SkyCAP?

SkyCAP is a software solution to provide netted I/P access over half duplex LDR satellite (also LOS) links. It is the integration of the proposed MIL-STD-188-184A with an I/P interface. The original goal was to only pass TCP for mail, web browsing, ftp, etc. but has since been expanded to support all I/P types. SkyCAP has demonstrated use on other tactical Line-of-Sight (LOS) VHF/UHF radio networks and shows potential for Over-the-Horizon (OTH) HF radio modes.

DOD does not have a UHF SATCOM I/P network waveform.

What Is SkyCAP?

- **SkyCAP is a TDMA implementation of MIL-STD-188-184. It includes proxy-tunnel component allowing for efficient IP networking and latency tolerance. The TDMA protocol provides shared use of the satellite channel in both netted and point-to-point modes.**

- **<u>A little on 184:</u>**
  - ***It is a RED side CSMA data link protocol designed for UHF SATCOM.***
  - ***MIL-STD-188-184 defines an interoperable waveform standard for data controllers required to operate over single-access, 5- and 25-kHz ultra high frequency (UHF) satellite communications (SATCOM) channels.***
  - ***It is designed to reliably control the flow of data over noisy communications channels at high throughput rates and with minimum setup required for interoperability and performance.***

- **SkyCAP is a modification of this MIL-STD prepared to comply with Joint Staff direction requiring that a new standard for data control be developed.**

- **This MIL-STD defines the mandatory system parameters for planning, engineering, procuring, and using data control functions that will be used to transfer error-free data over UHF SATCOM channels during joint operations.**

Purpose of SkyCAP

- 5kHz Program MIL-STD interoperability for basic 184
- To provide a reliable way to use ADW in support of IXS transition and demonstrate the benefits of moving towards a new integrated waveform (IW)
- To meet user requests for an easy to use low or no cost method to allow multiple users to pass I/P data across a single UHF SATCOM 5kHz or 25kHz channel and other LOS channels as appropriate
- Provide a Windows software module capable of being used across the full spectrum of Navy/USMC radio systems

Software Architecture

Windows development completed (DEC 2004) via direction/funding from MARCORSYSCOM C2PC Program

System Layers

Application	TCP/IP Clients	ISDS, FTP, HTTP, MS Outlook, etc.
	TCP/IP Servers	ISDS, FTP, MS Exchange, etc.
Gateway	TDMA Gateway	INET184, **Custom proxies**
Protocol	TDMA Library	MIL-STD188-184A
Operating System	Kernel	Linux
	Device Driver	Route56
Hardware	Serial Interface	SeaLevel PCI
	Crypto	KG-84A
	Modem	MD-1324A
	Radio	WSC-3

redhat. Linux 7.2

or

Microsoft Windows

=

SkyCAP

UHF SATCOM IP NETWORKING ANYTIME ANYWHERE

Testing with GCCS-M segments completed in MAR/APR 2005

Initial exercise use in Lead Shield in MAY 2005

How It Works

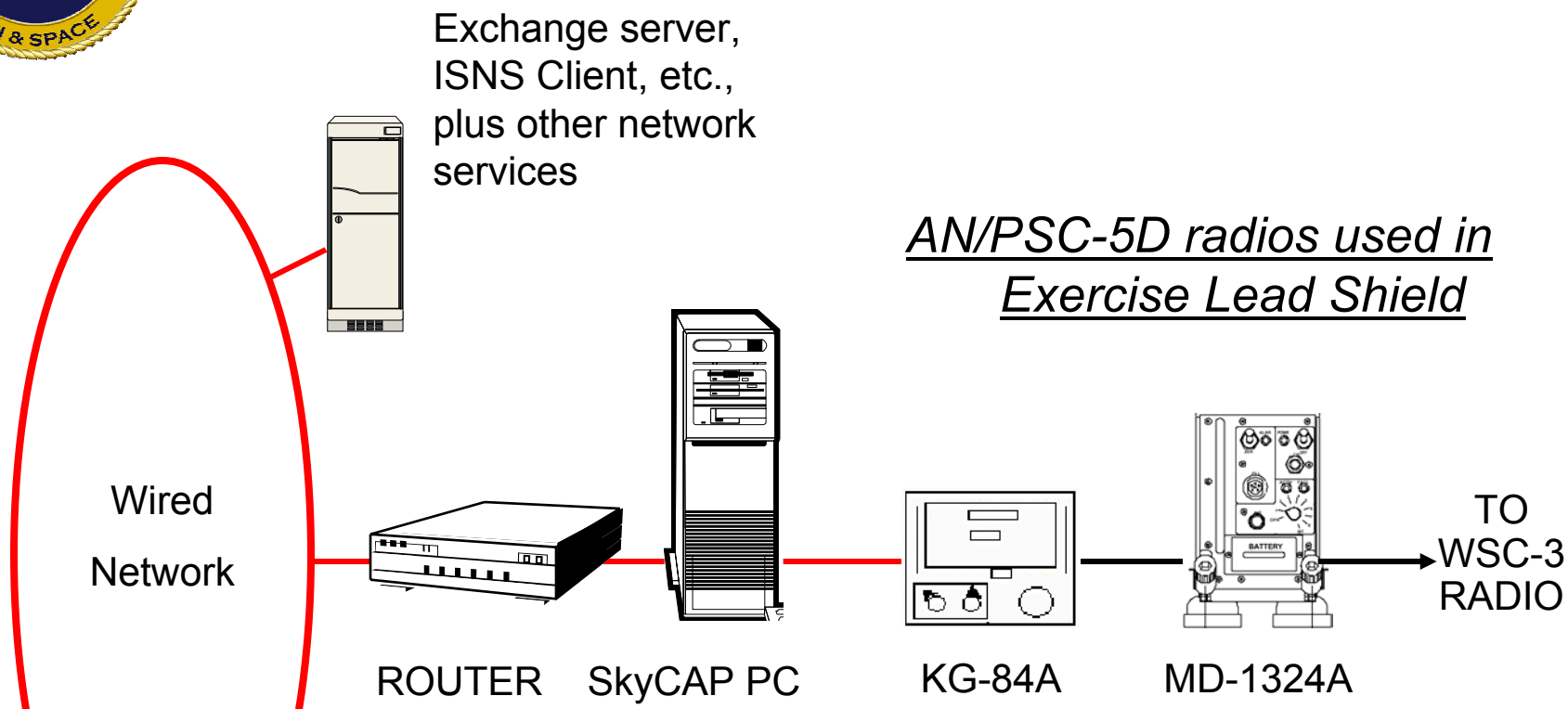

- The SkyCAP PC is assigned an I/P address; tunnels are automatically created for the desired ports; it then functions as a proxy.
- I/P data is stripped down, compressed, and packaged into SkyCAP messages with all FEC applied.
- The networking protocol then transmits the message over the WAN to the distant end where the reverse is performed.

SkyCAP Screenshot

SkyCAP - Microsoft Internet Explorer

File Edit View Favorites Tools Help

Back Search

Address http://127.0.0.1/cgi-bin/skycap/admin/skycap-frame-admin-cgi.pl

Go Links

SkyCAP	2:24:14 PM	Station ID: 41	Name: HMMMM1	Radio: PSC5D at 25kHz	Type: Controller	XMT BPS: 512	RCV BPS: 512	Status: ON	EMCON Press to Mute	SPAWAR

Site Navigation

- Main
  - Main Display
  - Other Stations
  - Start
  - Stop
  - Reset
  - Clear Notes
  - Clear All
- Detailed Status
- Sky Chat
- Permissions
- Setup
- Diagnostics
- Advanced Setup
- Archive Chat
- Help

Main Display

NOC	
ID Number:	41
Start Time:	unknown
Start Date:	unknown
Uptime hours:	unknown
XMT	
RCV	
Avg Chan % Used:	0.00
Frame Number:	unknown

Present Station: HMMMM1			
ID Number:	41	Range:	274
Start Time:	unknown	BER:	0
Start Date:	unknown	SAT Condition:	Unknown
Uptime hours:	0.00	EMCON:	OFF
Priority:	1	Retrans %:	unknown
XMT Avg BPS:	0	RCV Avg BPS:	0
XMT Inst BPS:	0	RCV Inst BPS:	0
XMT Queue:	0	RCV Queue:	0
		Avg Chan % Used:	0.00

Received Notes

Sat Apr 16 20:09:33 2005 From:EODMU7HQ Msg:test message to station 41
Sat Apr 16 20:12:46 2005 From:EODMU7HQ Msg:Was that a text message or do I get a "message recieved" message when I send a message?
Sat Apr 16 20:16:17 2005 From:EODMU7HQ Msg:MESSAGE FROM STATION 51
Sat Apr 16 21:04:49 2005 From:HMMMM1 Msg:test 2
Sat Apr 16 21:05:30 2005 From:HMMMM1 Msg:a quick test from 41 to 41

Note:

Dest: Priority: Medium

SkyCAP - Microsoft Internet Explorer

Other Stations Display

Station #41		None		None		None		None		None	
Station ID:	41	Station ID:	None	Station ID:	None	Station ID:	None	Station ID:	None	Station ID:	None
Priority:	unknown	Priority:	None	Priority:	None	Priority:	None	Priority:	None	Priority:	None
Start Time:	14:24:02	Start Time:	None	Start Time:	None	Start Time:	None	Start Time:	None	Start Time:	None
Start Date:	04/28/05	Start Date:	None	Start Date:	None	Start Date:	None	Start Date:	None	Start Date:	None
Uptime:	0.00	Uptime:	0	Uptime:	0	Uptime:	0	Uptime:	0	Uptime:	0
XMT	RCV	XMT	RCV	XMT	RCV	XMT	RCV	XMT	RCV	XMT	RCV
Chan %:	0.01	Chan %:	None	Chan %:	None	Chan %:	None	Chan %:	None	Chan %:	

Last updated: Thu Apr 28 14:24:05 PDT 2005

Station Controls

User Setup Options

Radio Status

Direct Chat

Other Station Status

Done

Start | SkyCAP - Microsoft Intern... | SkyCAP - Microsoft Int... | 2:24 PM

Spiral Development Sequence

- JAN 04
  - Start SkyCAP live SATCOM testing (LINUX version)
- MAR 04
  - Complete SkyCAP JWID build (LINUX version)
- APR 04
  - Complete user test documentation
  - Complete software accreditation for SkyCAP for JWID 2004
- June 04
  - Participated in JWID 2004 demonstration
- DEC 04
  - Complete Windows development
  - Deliver 12 SkyCAP Windows systems to MARCORSYSCOM
- FEB-MAR 05
  - Commence SkyCAP/MEDAL tests with CMWC, NSCT-1 & EOD
- MAY 05
  - SkyCAP/MEDAL in Exercise Lead Shield III

Goals of SkyCAP in JWID

- **Use programmable traffic for scheduled allocation of resources and delivery of timed traffic**
- **Demonstrate reliable single transmission of SMTP and/or X.400/DMS to multiple domains**
- **Demonstrate reliable and timely transfer of FOTC/NETPREC GCCS-M data via SkyCAP**
- **Demonstrate SKYCHAT, a web based chat application**

SkyCAP in JWID 2004

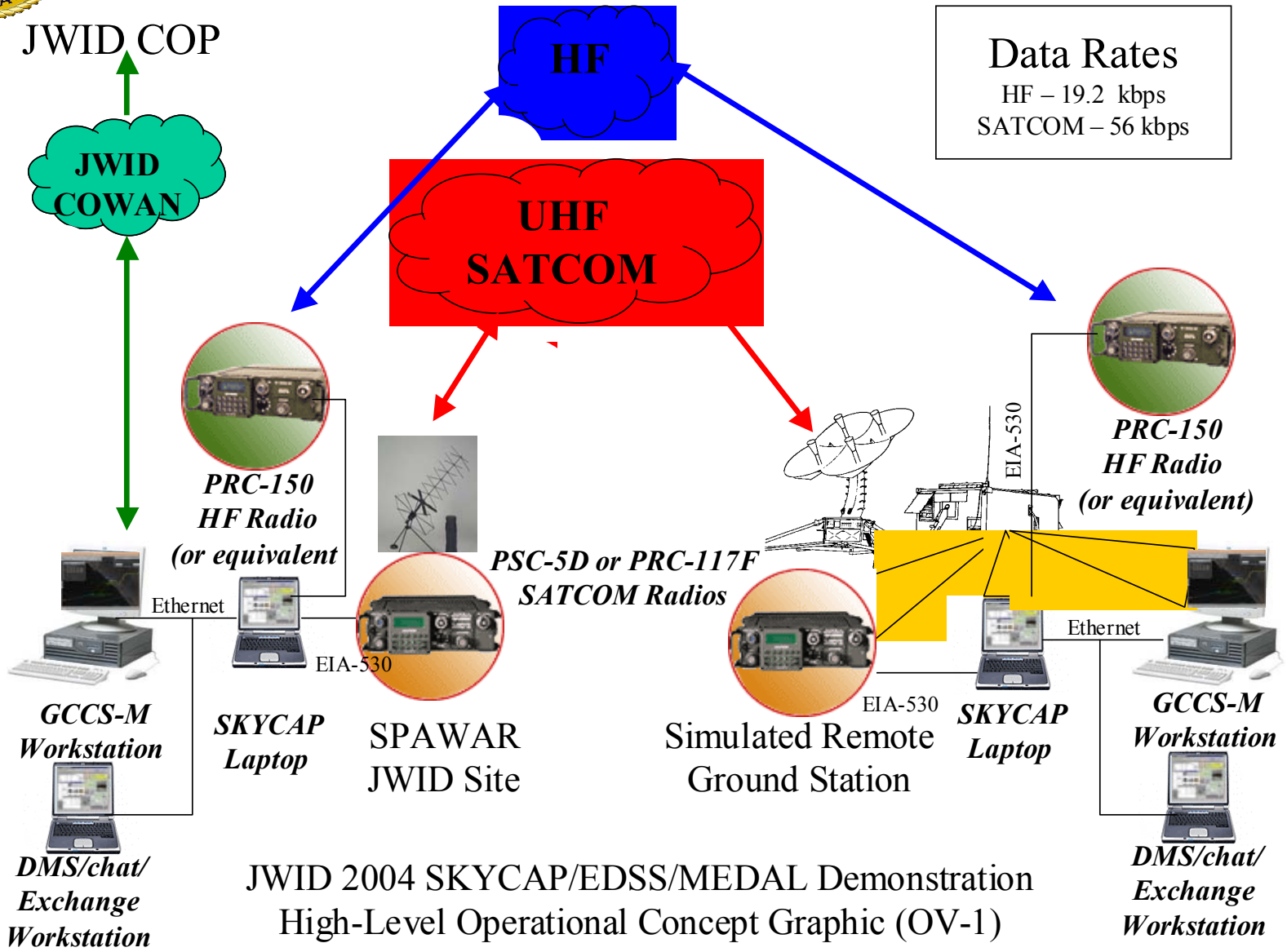

JWID 2004 SKYCAP/EDSS/MEDAL Demonstration
High-Level Operational Concept Graphic (OV-1)

JWID 2004 Results

- **Following is quoted from official JWID 2004 final assessment:**
  - The SkyCAP demonstrated significantly improved methods of providing IP connectivity to existing GCCS-M tactical decision aids using current tactical radio systems.
  - The SkyCAP/MEDAL/EDSS combination demonstrated significantly improved methods of providing IP connectivity to existing GCCS-M tactical decision aids using current tactical radio systems.
  - The systems successfully passed the following types of data:
    - Standard GCCS-to-GCCS traffic in the form of USMTF/OTHG text messages via the GCCS NETWORK/NETPREC interfaces to a remote node representing a small tactical field unit. This was accomplished via both standard shipboard (WSC-3) and field manpack (PRC-117F) radio systems.
    - C2PC traffic as an extension of the GCCS track picture from one master Gateway to two remote Gateway/client workstations representing small ships. This was accomplished using standard field HF radio systems.
    - Imagery files (JPEG format was used, although any file type was possible).
    - Chat using Microsoft Chat.
    - Web browsing using standard Internet Explorer

What is MEDAL?

DECISION SUPPORT SYSTEM =

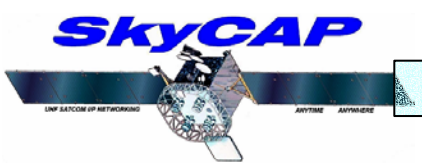

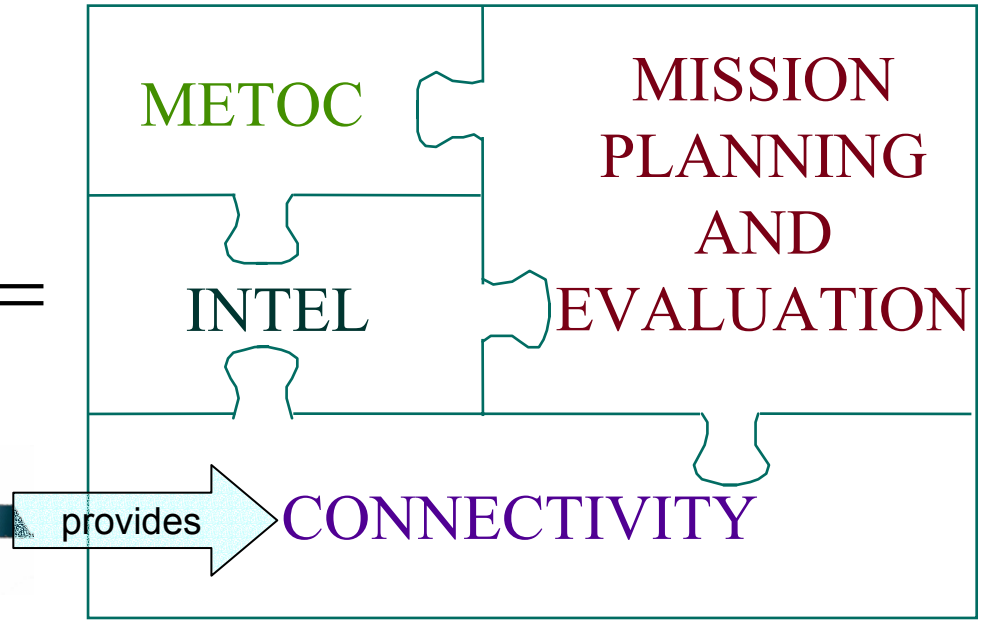

= "A FORCE MULTIPLIER"

MEDAL is **THE** Integrated Mission Planning and Evaluation Tool for MIW Forces

COMINEWARCOM 201600Z NOV 96

MEDAL supports:

- MIW Mission Planning.
- MIW Evaluation.
- Command and Control of MIW forces.

MEDAL Testing

- **Test offer made at initial request of EODMU 7 to test distribution of REMUS platform data via MEDAL from remote mobile teams.**

- **Initial testing 14-15 FEB 05 highlighted configuration and physical problems that required correction.**

- **Follow-on testing 1 MAR 05 at NSCT-1 was successful on both 25 KHz and 5 KHz channels.**

- **Continued MEDAL testing conducted in MAR/APR with EODMU-7 using base stations and mobile HMMWV's.**

- **Use of SkyCAP to support MEDAL data exchange in Exercise Lead Shield III 23-27 MAY 05 via SATCOM and UHF LOS links.**

SkyCAP/MEDAL Test Configuration

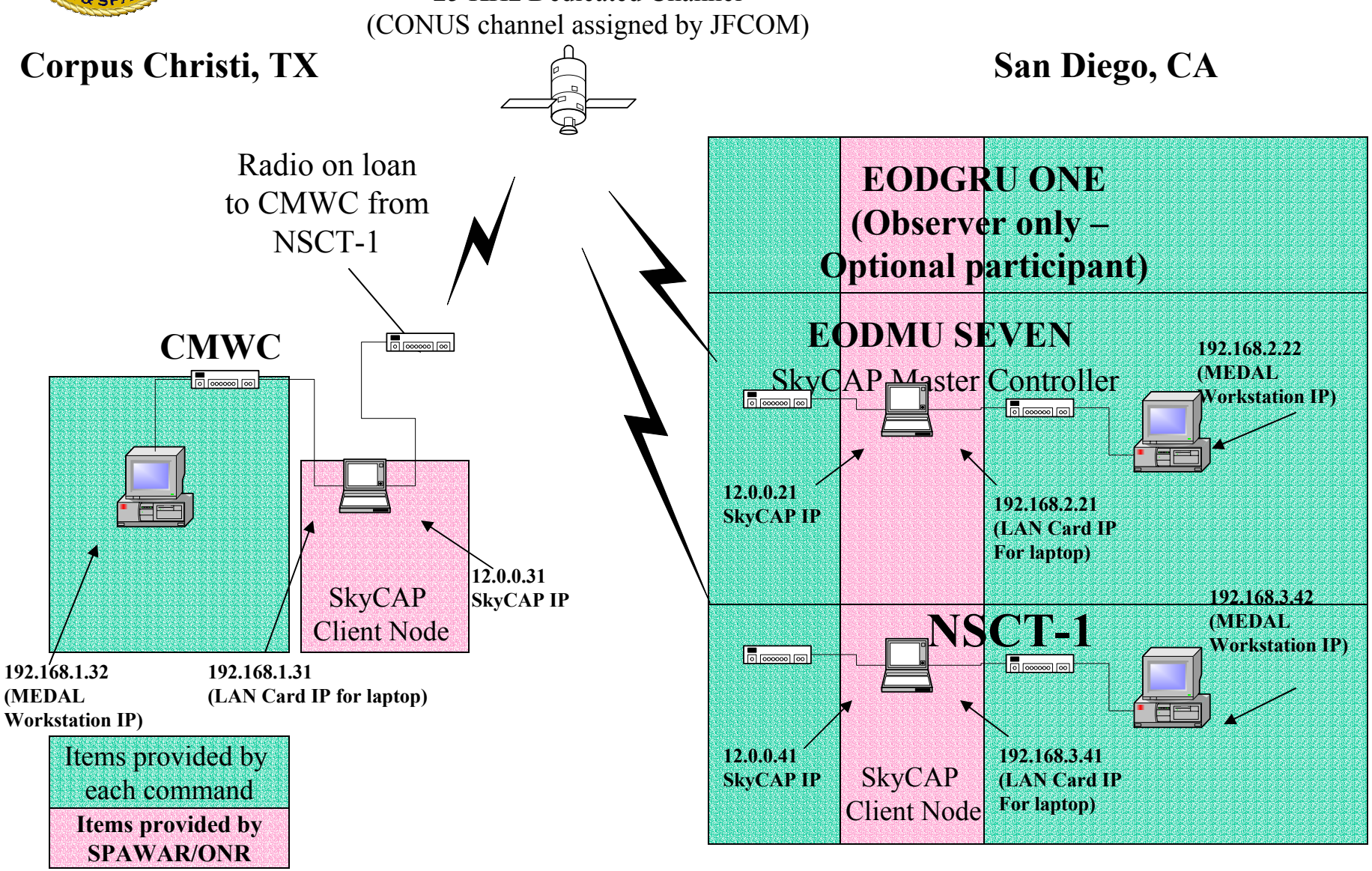

What is EDSS?

- **EDSS is an operational Integrated Mission Planning and Execution Tool supporting Expeditionary Forces**
  - ➔ **Set of software Tactical Decision Aids serving all Expeditionary Warfare Commanders ~ Navy & Marine Corps**
  - ➔ **ONR sponsored, government owned software**
  - ➔ **DII COE compliant software**
    - ➔ **US Navy ~ developed as a GCCS-M 4.x segment**
    - ➔ **US Marine Corps ~ developed/transitioned as a C2PC v6.1 Injector**
  - ➔ **Currently integrated with other Joint/Naval systems (AFATDS, ICODES, MEDAL) and designed to easily interface with additional systems in follow-on spirals (TBMCS, JMPS, etc.)**

EDSS Screenshot

UNCLASSIFIED

System - WGS 1984: Global Definition II

File Edit View Map Favorites Plot Controls Bookmarks Tools TDAs Tracks Corr/Bcst EDSS Intelligence Window Help

1 : 23,104

EDSS Task Manager

System Help

- Operational Areas - DG-04 CAPO TEULADA
  - Detailed Data
  - Export/Merge
  - Import
- Battlespace Geometry
  - Detailed Data
  - Display Controls
  - Ground Reference
- Air Assets
  - Detailed Data
- Ship and Landing Craft Assets
  - Detailed Data
- Serials
  - Detailed Data
- Force Lists
  - Detailed Data
    - Detailed Data
- Task Organization
- Course Of Action - DESTINED GLORY 04
  - Detailed Data
  - Event Schedule
  - MAGTF Plans
    - Detailed Data
    - Units
      - Detailed Data
  - Landing Plans - ADMIN OFFLOAD
    - Detailed Data
    - Waves
      - Detailed Data
      - Scenario Alerts
      - Landing Plan Conflicts
      - Messages
        - OPTASK Amphib
        - PCS Intentions
        - LCS Intentions
      - Landing Craft Availability
      - Landing Craft Employment
      - Helo Availability
      - Helo Employment
      - AAV Availability
      - AAV Employment
- Auto-Scheduler
- Air Plan Editor
- Serial Tracking
  - Detailed Data
  - Serial Loads
  - PCVT
  - Find Serials

COA Planning Tools

Boat Lanes

Assault Geometry

Landing Simulation

Transit Routes

Wave Info

Message Generator

Landing Event Scheduler

BLUE BEACH

1 BLUE2

BLUE 2 LOD

BLUE 1 LOD

GREEN

ROMEO

RDM2BLUE2

SIERRA

NEST

OSCAR

PAPA

NOVEMBER

MIKE

LIMA

OD

Wave Info

Craft type = Surface-Assault

Wave 1 to beach BLUE BEACH

EDSS Working Window - DG-04 CAPO TEULADA

Scenario Controls

Interval: 30 Minutes | Time Format: Zulu | Total Duration: 00:02:25

Plan Name	Destination	Wave # / Unit	Craft	Start	End	Duration(HH:M	CRS/SP	Serials
ADMIN OFFLOAD	BLUE BEACH	1	LCU MK1	H-25	H-20	00:05		
ADMIN OFFLOAD	BLUE BEACH	1	LCU MK1	H-20	H-Hour	00:20	RD...	
ADMIN OFFLOAD	BLUE BEACH	1	LCU MK1	H-Hour	H+20	00:20		
ADMIN OFFLOAD	BLUE BEACH	1	LCU MK1	H+20	H+43	00:23	RD...	
ADMIN OFFLOAD	BLUE BEACH	2	CTM	H-1	H+4	00:05		4...

OCT 03 0430Z | OCT 03 0500Z | OCT 03 0530Z | OCT 03 0600Z

1 BLUE BEACH
1 BLUE BEACH
1 BLUE BEACH
1 BLUE BEACH
2 BLUE BEACH

Displays the Scenario Controls Window for the current Plan.

385538N 0084049E Number of Objects: -20/2276-

385423N 0084110E 7,775.72 M 020902:25Z OCT 04

Start | System - WGS 1984: G... | My Documents | Microsoft PowerPoint - [f... | Scenario Controls Window | 2:02 AM

MARCORSYSCOM Testing

- **SkyCAP Windows version tested for MARCORSYSCOM at SPAWAR JICF and MCTSSA (Camp Pendleton) in DEC 04/JAN 05.**
- **Demonstrated reliable data transmission of C2PC and other network data via 25 KHz channel and LOS mode.**
- **Some C2PC data types (Overlays and Opnotes) tended to clog the circuit due to the nature of their transmission**
- **Standard GCCS-M to C2PC track distribution was not affected**
- **Twelve SkyCAP systems delivered to MARCORSYSCOM for continued testing.**
- **EDSS will become an injector of C2PC in Q1FY06**

Goals of SkyCAP in Lead Shield

- **Demonstrate reliable GCCS-M tactical data distribution of MEDAL and other data**
- **Demonstrate SKYCHAT, a web based chat application, for tactical coordination**
- **Demonstrate image file transfers from small mobile units (RHIB, swath boats)**
- **Demonstrate full IP connectivity between supported nodes using UHF SATCOM and LOS**

SkyCAP Locations in Lead Shield

USCG Base
COMCMRON ONE
NSCT-1 shore det
EODMU-7 det
SkyCAP nodes

HM-14 det
SkyCAP node

EODMU-7
Swath boat
SkyCAP
node

Mine operations locations

SkyCAP Data Architecture for Lead Shield

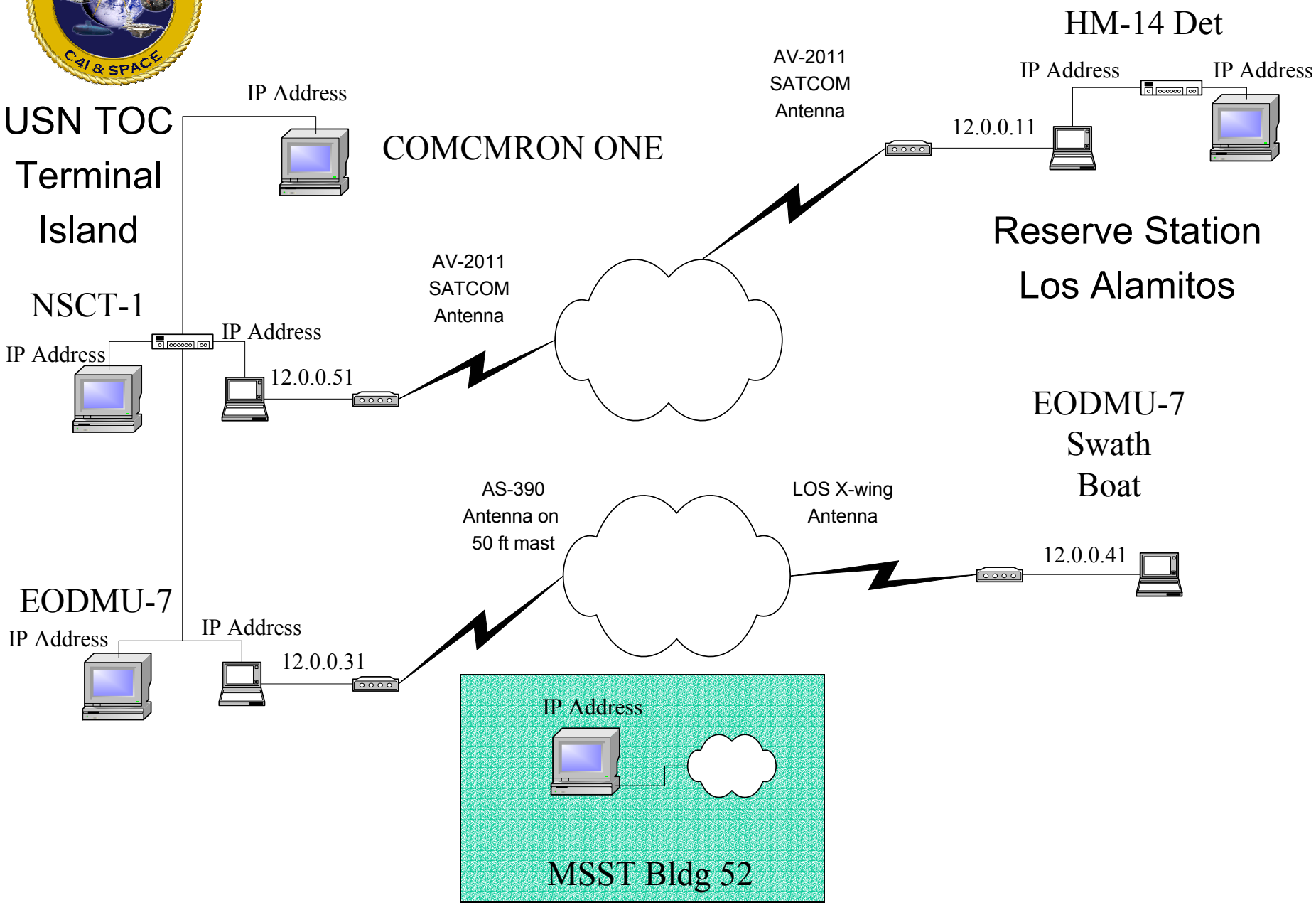

SkyCAP Lead Shield Configurations

UHF LOS Antenna on 50ft mast

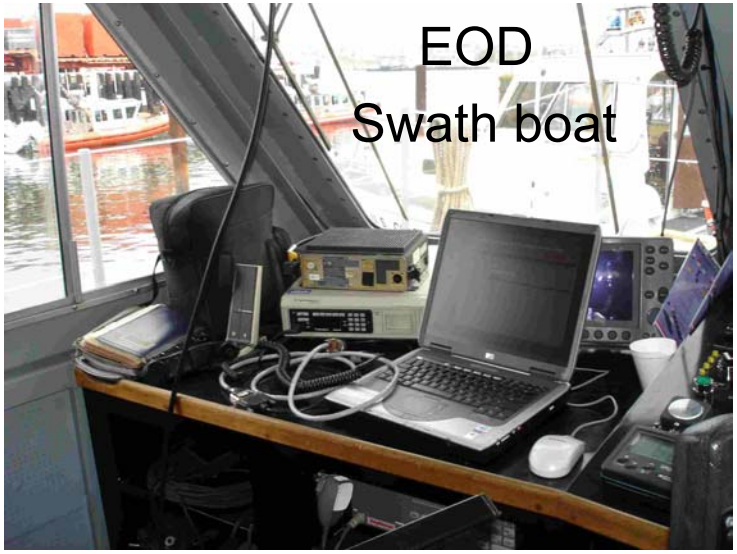

AV-2011 SATCOM Antenna

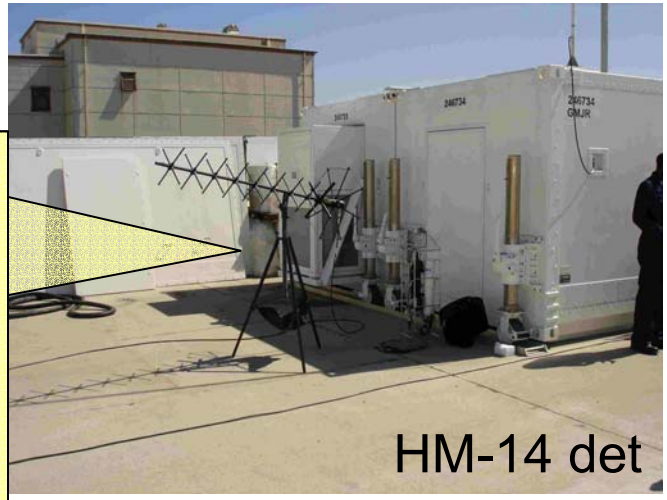

What next?

- **Discussions ongoing for potential use of 25 KHz SATCOM channel to perhaps replace OTCIXS with OTCIXS-IP (SkyCAP).**
- **Additional testing with CMWC and EOD units is scheduled. SkyCAP to participate in October GOMEX with MCM forces.**
- **SkyCAP under consideration as upgrade to MCM vessel communications suite.**
- **SkyCAP to be used with ongoing ONR projects (ARVCOP).**
- **USCG expressing interest in using SkyCAP as airborne IP link to C-130 aircraft.**
- **DOD interest in using SkyCAP for medical IP data exchange from mobile medical units.**

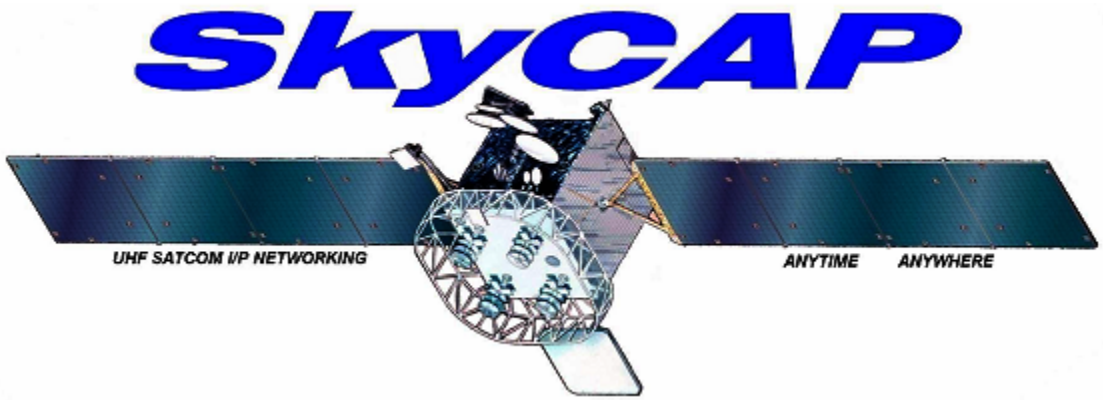

Questions?