Expeditionary Strike Group: Command Structure Design Support

Susan G. Hutchins,*[1] William G. Kemple,[1] David L. Kleinman,[1] and Susan P. Hocevar[2]
[1]Information Sciences Department
[2]Graduate School of Business and Public Policy
589 Dyer Road
Naval Postgraduate School
Monterey, CA 93943

*Corresponding author: (831)656-3768

Paper for the C4ISR/C2Track: **Paper # 364**

10th International Command and Control Research & Technology Symposium

Expeditionary Strike Group: Command Structure Design Support*

Susan G. Hutchins,[1] William G. Kemple,[1] David L. Kleinman,[1] and Susan P. Hocevar[2]
[1]Information Sciences Department
[2]Graduate School of Business and Public Policy
Naval Postgraduate School, 589 Dyer Road, Monterey, CA 93943
{shutchins, kemple, dlkleinman, shocevar}@nps.edu

Abstract

An Expeditionary Strike Group (ESG) is a new capability mix that combines the combat power of three surface combatants and one submarine with an Amphibious Readiness Group/ Marine Expeditionary Unit (Special Operations Capable) (ARG/MEU(SOC)). ESGs provide Combatant Commanders with more flexible, robust, and distributed offensive combat capability and enhance Naval expeditionary force survivability. Beginning in 2002, the Navy and Marine Corps began an experiment to explore the offensive and defensive capabilities of the ESG as well as different command structure options. This paper describes the initial effort by the Adaptive Architectures for Command and Control research program to support the analysis and design of ESG-1 command structures through modeling and analysis.

1. Introduction

The Chief of Naval Operations' Global Concept of Operations requires a fleet of approximately 375 ships that will increase the U.S. Navy's striking power from today's 12 Carrier Battle Groups (CVBGs), to 12 Carrier Strike Groups (CSGs), 12 Expeditionary Strike Groups (ESGs), multiple missile-defense Surface Action Groups (SAGs), and guided-missile submarines. These groups will operate independently around the world to counter transnational threats and they will join together to form Expeditionary Strike Forces — the "gold standard" of naval power — when engaged in regional conflict.

This dispersed, netted, and operationally agile fleet, operating as part of the Joint Force, will deliver the combat power needed to sustain homeland defense, provide forward deterrence in four theaters, swiftly deter two aggressors at the same time, and deliver decisive victory in one of those conflicts. The Global Concept of Operations is designed to increase striking power, enhance flexibility, and provide more flexible, robust, and distributed offensive combat capability by transforming Amphibious Readiness Group/ Marine Expeditionary Unit (Special Operations Capable) ARG/MEUs into ESGs.

An ESG is a new US Navy task force that integrates amphibious warships and Marines with a tomahawk missile-capable cruiser and destroyer, a frigate and fast-attack submarine. ESGs enhance Naval expeditionary force survivability by transforming a previously vulnerable, yet highly valuable, asset into a more combat credible force package (ESG OPS 2005). This increased combat capability includes a variety of assets to conduct ISR, Strike and Naval Fire Support, Air Warfare, ASW/Surface Warfare, Maritime Interdiction Operations, and Tactical Ballistic Missile Defense.

* Funding for this research was received from the Cognitive and Neural Science Technology Division of ONR.

Beginning in 2002, the Navy and Marine Corps began an experiment to explore the offensive and defensive capabilities of the ESG as well as different command structure options. Advantages offered by ESGs include better distribution of global power, enhanced combat capability, and improved technologies and efficiencies for conducting the Global War on Terror (GWOT). The combination of three Cruiser-Destroyer (CRUDES) ships, a submarine, and a ARG/MEU(SOC) to form an ESG increases the offensive and defensive capabilities of the group. Core capabilities provided by ESGs include: (1) Power projection, (2) Maritime superiority for air, surface and subsurface, (3) Maritime special operations, (4) Amphibious operations, (5) Military operations other than war, (6) Enabling operations, (7) Supporting operations, and (8) serving as a Joint Task Force enabler.

This new expeditionary strike force (ESF) concept is a key component of planning for future U.S. military capabilities. Naval expeditionary force capabilities provide quick reaction to hostilities, providing humanitarian aid, power projection, and logistical support to forces ashore, in addition to supporting other types of operations. In this new concept, the focus has shifted from placement of ships in the formation to deciding on what capabilities are needed and looking across the spectrum of available assets to decide which assets to bring to bear (Deal, Geis, & Goetke, 2003.) Flexible, novel use of assets and "thinking out of the box" are emphasized when deciding on the placement of assets and ships (US Fleet Forces Command, 2002).

1.1 Historical Perspective

Because of their deployed nature, Naval Forces are frequently the first on-scene US forces capable of providing a quick reaction against a hostile country, and often conduct the "first strike" against a hostile country. Follow-on forces, such as additional Carrier Strike Groups (CSGs), ESGs, amphibious forces, dedicated mine warfare forces, maritime pre-positioning forces, and combat logistics forces flow into the area of operations (AOR) to sustain operations over extended periods. (US Fleet Forces Command, 2002). As additional forces arrive, the logistical burden and cost of operations increase. Expeditionary naval forces eliminate some of the logistical burden associated with follow-on forces: Maritime pre-positioning forces are an excellent example. Moreover, Naval forces, through presence, enhance regional stability and provide alternatives as diplomatic negotiations are conducted to restore regional stability.

1.2 What is an Expeditionary Strike Group?

As stated above, an ESG combines an ARG/MEU(SOC) with the combat power of surface and submarine combatants. Amphibious landing ships transport troops, vehicles, and supplies wherever they are needed and provide great flexibility to commanders in planning operations. However, amphibious ships are not designed for fighting hostile naval forces, especially highly maneuverable patrol craft found in coastal environments. Moreover, traditional ARG/MEU(SOC) deployments had no capability to provide naval surface fire support (NSFS) for Marines ashore or to strike targets at sea. In order to counter littoral threats, the Navy has transformed ARGs into ESGs by assigning dedicated combatant ships—cruisers, destroyers, and frigates—to protect the amphibious ships. ESGs are now able to provide NSFS and tactical land attack missile (TLAM) strikes in support of Marines ashore.

An ESG is a scalable, adaptable force, capable of planning and executing rapid strike and combat operations while operating in a limited non-permissive (i.e., low threat) environment. ESGs combine a highly mobile group of platforms with a lean command and authority structure. This rapid response is enabled by the capability to rapidly coordinate, deploy, and move to locations where they are needed. In addition, ESGs are designed to be self-sustaining, as well as capable of autonomous action based on being comprised of a diverse set of capabilities. A wide range of missions can be supported, from amphibious assault to disaster relief, based on the composition of integrated Navy and Marine Corps forces. Structural adaptability, a unique and key characteristic, is an inherent characteristic of the ESG. One aspect of this adaptable structure entails activating alternate warfare commanders in order to distribute workload. Lateral collaboration is employed as an enabler of structural adaptability with a reliance on non-traditional communication and coordination.

1.3 Increased Capability

The first ESG-1 deployed in 2003; the ships and commands that deployed with ESG-1 are listed in table 1. Commander ESG-1 viewed the ESG as the maritime component for the Global War on Terrorism (GWOT), and the flag-led staff provided the combatant commander with: (1) a subordinate staff capable of planning at the operational level; (2) the capability to task organize, which included taking command of inorganic forces as required; and (3) a single source commander capable of providing maritime and land force (US Fleet Forces Command, 2002). ESG 2 deployed in 2004 from the East coast, and parts are still overseas. The two deployments were similar in terms of ship and aircraft composition, but different in ESG organizational structures and command relationships (Deal, Cornforth, Goetke, and Parcell, 2004). The group composition of both pilot deployments increased the group's offensive and defensive capabilities.

Table 1. Commands and Ships that Deployed with ESG-1

COMMANDS	SHIPS
COMEXSTRIKGRU One	USS Peleliu
13th MEU(SOC)	USS Ogden
COMPHIBRON Three	USS Germantown
TACRON-11 Detachment 4	USS Port Royal
BMU-1 Detachment C	USS Decatur
ACU-5 Detachment C	USS Jarret
ACU-1 Detachment E	USS Greenville
EODMU-3 Detachment	
Fleet Surgical Team 5	
Fleet Info Warfare Center Detachment	
HC-11 Detachment 9	
HSL-37 Detachment 1	
HSL-49 Detachment 3	

1.4 ESG Missions

The ESG can be used to support a combatant commander in larger contingencies as part of an ESF or it can provide the core capability to form a Joint Task Force for smaller, operational-level missions. The current ESG-1's mission is to, "provide the Combatant Commander or Fleet Commander a versatile sea-based operational force that can be tailored to a variety of missions, including quick reaction crisis response options in maritime, littoral, and inland environs in support of U.S. Policy. The ESG is capable of executing all ARG/MEU(SOC) missions and additional offensive and defensive operations in a limited non-permissive environment." (EWTGPAC, 2005)

Eight core capabilities are provided by ESGs: Power projection, maritime superiority (air, surface, and subsurface), maritime special operations, amphibious operations, military operations other than war, enabling operations, supporting operations, and Joint Task Force (JTF) enabler. Table 2 presents a list of the integrated essential tasks that are conducted by an ESG. Table 3 presents the capabilities specifically performed by the MEU.

Table 2. Integrated Mission Essential Tasks Conducted by an Expeditionary Strike Group

Both USN and USMC	
Conduct Intelligence, Surveillance and Reconnaissance	Conduct Amphibious Assault
Conduct Information Operations/ Warfare	Conduct Amphibious Withdrawal
Tactical Deception Operations	Conduct Amphibious Demonstration
Provide Operational Fires (Joint/ Coalition)	Conduct NEO
Provide Anti-Terrorism/ Force Protection	Conduct Humanitarian/ Disaster Assist
Conduct Terminal Guidance Operations	Conduct Peace Operations
Conduct MIO/ EMIO Operations	Conduct Deliberate Planning
Conduct ESG Force Defense (AD/USW/SUW/DAF)	Provide Contingency Support Packages (TRAP, CASEVAC, QRF, MASS, CASUALTY)
Conduct VBSS (compliant/ non-compliant)	**USMC Specific**
Conduct Sustainment Operations	Conduct Amphibious Raid
Provide Command, Control, Communications and Computers	Conduct Direct Action Operations (Precision Raid or VBSS)
Conduct Initial Terminal Guidance Operations	Conduct Airfield/ Port Seizure
USN Specific	Conduct Security Operations
Provide Theatre Missile Defense Warning	Conduct Limited Expeditionary Airfield Op's
Provide Sea Lines of Communications Protection	Employ Non-Lethal Weapons
Provide Sanctions Enforcement	Conduct Enhanced Urban Operations
Deploy/ Conduct Operational Maneuver	

Table 3. Marine Expeditionary Unit (MEU) Capabilities

MARINE EXPEDITIONARY UNIT (MEU) CAPABILITIES
Amphibious Operations
Amphibious Assault
Amphibious Raid
Amphibious Demonstration
Amphibious Withdrawal
Direct Action Operations
Seizure/Recovery of Offshore Energy Facilities
Visit, Board, Search and Seizure Operations (VBSS)
Specialized Demolition Operations
Tactical Recovery of Aircraft and Personnel (TRAP)
Seizure/Recovery of Selected Personnel or Material
Counter-proliferation of Weapons of Mass Destruction
Military Operations Other Than War (MOOTW)
Peace Operations
- Peacekeeping
- Peace Enforcement
Security Operations
Noncombatant Evacuation Operations (NEO)
Reinforcement Operations
Joint/Combined Training/ Instruction Team
Humanitarian Assistance/ Disaster Relief
Supporting Operations
Tactical Deception Operations
Fire Support Planning, Coordination and Control in a Joint/ Combined Environment
Signal Intelligence/ Electronic Warfare
Military Operations in Urban Terrain
Reconnaissance and Surveillance
Initial Terminal Guidance
Counterintelligence Operations
Airfield/ Port Seizure
Limited Expeditionary Airfield Operations
Show of Force Operations
Joint Task Force Enabling Operations
Shipping Operations

1.4.1 "Plug and Play"

Among other requirements, ESG-1 must be able t work smoothly while planning and conducting these missions in several contexts. Two issues are of particular interest to this study. ESG-1 as a "unit of force" under a senior Naval Commander such as a Joint Force Maritime Component Commander (JFMCC), Fleet commander, or Amphibious Force Commander requiring coordination with N-staff/CWC Doctrine and possibly Joint Amphibious Doctrine. Or, as part of a Joint Force, working directly for the Joint Force Commander. This latter case could range from a

small JTF with its own AOR to a context that requires significantly more coordination with the JFACC, JFLCC, JFMCC, and JSOTF. In this case Joint Doctrine is applicable, including Joint Amphibious Doctrine. While the set of possible missions remains constant across contexts, it is assumed that the mix and frequency of mission types will change. Equally, or more important, the C2 agencies with which the ESG will need to interoperate, and their underlying doctrine will change. For example, coalition ships may join the ESG for various missions.

1.4.2 Dispersed Operations and Attachments

Based on past ESG deployments, ESG-1 can anticipate creating Expeditionary Action Groups (EAGs), where two or more ships for the EAG are typically deployed (e.g., to put Marines ashore) to some location outside the immediate battlespace, along with supporting air assets. A supported commander is designated for each EAG. The fact that ESG assets are likely to be dispersed geographically, as EAGs or otherwise, has led people to question whether a CWC-like organization is best. Typically, CWC requires a close proximity of all warfare commanders for planning, asset apportionment, and task execution. At the same tie, ESG-1 can anticipate detaching assets to support other commanders and assuming control of additional assets from coalition partners, the Coast Guard, the nay, etc.

1.5 Organizational Structure and Command Relationships

The East coast ESG is organized around an existing ARG/MEU(SOC) with the PHIBRON and MEU(SOC) commanders typically operating in a "support relationship." Selected subject matter experts (SMEs) will augment the PHIBRON staff to facilitate planning and operations of the additional capabilities the surface combatants, submarine and other designated forces bring to the ESG. The West coast deployment established an ESG Staff, separate from the existing PHIBRON and ARG/MEU(SOC) staffs, which functions as the officer in tactical command (OTC). The ESG construct establishes a baseline staff and "pulls additional staff" from the existing ARG/MEU(SOC) staff and subordinate forces (Deal, Cornforth, Goetke, and Parcell, 2004).

2. Adaptive Architectures for Command and Control (A2C2)

The Adaptive Architectures for Command and Control (A2C2) research program, sponsored by the Office of Naval Research, for the past eight years has focused on helping to define adaptive command structures for future joint and combined forces. Early research involved working with the Chief of Naval Operations (CNO) Strategic Studies Group (SSG) XVIII to help define adaptive command structures for what will become Sea Power XXI. Next, the A2C2 team worked with Commander Carrier Group One (COMCARGRUONE), ADM Polatty's staff, to conduct a one-week experiment with model-driven alternative command structures in preparation for Global Wargame 1999 (Levchuk, Kleinman, Pattipati, Kemple, & Luoma, 2000; Hess, Entin, Hess, Hutchins, Kemple, Kleinman, Hocevar, & Serfaty 2000).

In 2001, A2C2 team members conducted a series of quantitative modeling and simulation analyses to support the SSG XXI Cognitive Concept Generation Team. The goal was to align the Navy's tactical C2 organization and processes with the FORCEnet concept. Results highlighted

the superiority of FORCEnet structures over Composite Warfare Commander (CWC) structures for future missions. Modeling and simulation results indicate that the FORCEnet C2 organizational structure has the potential to increase speed of command (over today's CWC structure) through more efficient use of resources, and, through increased collaboration, to improve the warfighter's shared awareness of the situation and of the roles, responsibilities, and actions of other warfighters (Serfaty, MacMillan, Baker, Entin, Wetteland, Miller, Bowden, Laughery, Pattipati, Levchuk, Kemple, Carley, & Handley, 2002). Based on this shared awareness, the research team predicts the FORCEnet structure will be more adaptable, thus better able to maintain performance as the situation and/or mission changes.

2.1 A2C2 Current Work

Our current research entails the use of A2C2 approaches for assessing ESG organizational constructs and structures. The A2C2 research team is engaged in a program to support the analysis and design of ESG-1 command structures based on interactions with RADM LeFever, Expeditionary Warfare (N75), and BGEN Schmidle, USMC, Expeditionary Force Development Center. An adaptive C2 architecture for an ESG — referring to both structure and process — should be able to work smoothly in either of the following two contexts (for both planning and operations) and to shift between the two: (1) As part of a Joint Force, working directly for the Joint Force Commander (e.g., operating as a theater reserve or operating as a small JTF). This could occur anywhere on a continuum ranging from acting as a small JTF with its own area of responsibility to being in a more complex context that requires significantly more coordination with the Joint Force Air Component Commander, Joint Force Land Component Commander, and Joint Force Maritime Component Commander. (2) As part of a larger Naval Force requiring coordination with its N-staff/CWC structure.

2.2 Research Objectives

The objectives for this A2C2 research effort include the following two goals: (a) model the current organizational architecture and C2 processes of ESG-1 and identify possible deficiencies and performance problems that are due to structural, organizational and behavioral causes; and (b) use the tools and techniques developed in the last few years by the Office of Naval Research-sponsored A2C2 program to suggest and experimentally test organizational structures that are more congruent with the evolving mission of the ESG.

The modeling effort will rely on a variation of the design-model-test-model method and will use an existing scenario that encapsulates key ESG missions. A deign-model-test-model research paradigm has been used previously to generate and test candidate organizational architectures and empirically evaluate them in experiment with military officers at the Naval Postgraduate School, in Monterey (Hutchins, Kemple, Entin & Serfaty, 1998). Three levels of analysis that could be performed include: assessment, comparison, and optimization.

Assessment might include analysis of the current ESG structure with a scenario across a range of measures of performance and measures of effectiveness. The goal for this level of analysis would be the diagnosis of problematic areas and suggestions for potential organizational remedies. Comparison would involve comparative modeling of the current structure vs. alternative

structures (alternative operational architectures) and a quantitative assessment of performance pay-offs. An optimization-based design and simulation of alternative architectures would focus on a quantitative assessment of performance pay-offs. Depending on time available, any or all of these methods could be applied to specific C2 architectural requirements. Examples of some data requirements that would be needed to perform a mission-based modeling and simulation study of alternative organizational structures for ESG include:

Assets:

- Technical specs: velocity, weapons payload, range, resource capability (of each weapon and of asset), etc.
- Missions and roles; ownership, utilization, unit cost
- Relative asset-to-task score

Mission:

- CONOPS; Decomposition into mission tasks; predictions for unanticipated tasks
- Desired contingency planning requirements
- Task resource requirements, locations, precedence constraints, required asset package

Communication:

- Rules of communication – events, messages, roles of liaison teams
- Communication constraints

Control & asset allocation:

- Asset ownership structure; overlap between platform and asset ownerships, and conflict resolution rules
- Asset request rules and asset transfer rules
- Control mechanism specs; asset-task allocation controller architectures and constraints

Command structure:

- Command methodology: command-generating cells and their rules/constraints
- Command vs. asset ownership

3 Command and Control Issues

3.1 Multiple Missions

Conducting multiple concurrent missions is an integral part of an ESG and these missions occur across the entire spectrum of operational missions. A complicating factor is that ESGs are being tasked with many new missions where both the staff and forces are being split apart while conducting these different missions. Additionally, in some cases the processes needed to conduct the mission have not yet been fully developed and personnel have not always had time to train for the new mission.

An extremely intense planning cycle is needed to keep one-step ahead of all these concurrent missions and this can cause some friction when the operators are tied up for a potion of each day with planning. Another complicating factor is the scarcity of assets available to support conducting multiple missions, for example, operations occurring on both land and at sea that require the same air assets. The requirement to perform multiple missions is creating situations where operators are performing new tasks, using new processes and, in some cases, using assets

in new ways. In ESG-1, the Admiral is the final arbitrator for resource allocation and other issues that arise each day.

3.1.1 A Busy Week in the Gulf. Imagine the following scenario, which illustrates the range of missions conducted by an ESG. The overriding mission for ESG-1 was to protect the oil platforms in the Northern Arabian Gulf (NAG). Protecting Iraqi oil platforms is a critical tasking, because an accident involving an oil platform would be a major environmental and economic disaster. In addition, two companies of Marines were ashore in Iraq conducting humanitarian operations and associated information operations, while another company of Marines was being prepared to be dropped off on the southern Horn of Africa for several weeks for training. At the same time, another group of Marines was planning to land in Iraq to conduct a non-combatant evacuation operation (NEO). The Air Control Element (ACE), comprised of six CH-46s (Marine aircraft), were used to conduct intelligence, surveillance and reconnaissance (ISR) in support of Maritime Interdiction Operations (MIO). Six AV-8Bs were sent off to the Coalition Operations Air Center (COAC) to conduct ISR and, in a separate operation, were sent to provide close air support. Additional Marine Corps aircraft, aboard the LHA, were used in logistics support of the Marine Expeditionary Unit (MEU).

During this same time period, Navy and Marines Corps personnel were involved, on a daily basis, in conducting multiple visit, board, search and seizure (VBSS) of local shipping traffic, in the Arabian Gulf, to intercept illegal goods as part of the Global War on Terror. The LHA, CG, and LSD were operating in the Northern Arabian Gulf, and additional assets — an Australian FFG and a German FFG — were sent to assist in protecting the oil platforms and high-value units. The mission was to warn ships away from the oil platforms and to enforce United Nations sanctions on contraband oil. This group of ships conducted approximately 25 queries per day and approximately 18 boardings per day (a combination of "compliant" and opposed boardings). These boat boardings were assisted by a Coast Guard cutter and two patrol craft (from 5th fleet).

Additional ad hoc tasking included planning for boarding a dhow on short notice (~12 hours) and being prepared for an on-call Special Recovery mission by Special Operations Forces (SOF). Related tasks included conducting surveillance operations, dealing with pirates who were harassing small boats, and maintaining the air defense posture. Implied tasks included care and protection of the detained ships and crew. The LPD, FFG, and two HH-60s (from the carrier battle group) were en route to the Horn of Africa as part of an Expeditionary Action Group (EAG) to rendezvous with a submarine. The DDG was working with 3rd Fleet as an anti-ballistic missile screen and a US Maritime Agency ship was performing underwater surveys in the local area, with ESG ships providing force protection for this ship.

While all these missions are well-suited to the ESG's capabilities, in some cases, the immediate nature of the tasking can stress the planning cycle as well as the allocation of assets required to conduct the mission. Additionally, the ability of different people to perform their job becomes even more critical than in the past. As an example, when the air defense commander requests another warfare commander's asset, synchronizing the use of these assets must occur seamlessly. In fact, the ESG found that it is important to have the warfare commanders co-located on the same ship because when they were distributed the communications overhead was too high to stay apprised of the situation. One change being made to the USS Tarawa entails alteration of the

Joint Operations Center so the SCC can be present in this space in recognition of the importance of face-to-face communications to maintain situation awareness.

4. ESG Research Issues

It is assumed that the two contexts in which the ESG will operate would generate different mixes and frequencies of missions and tasks. A key question is, can the ESG-1 make the most efficient and effective use of its assets to address the varying mix of missions across these two organizational contexts while using a CWC (or current?) structure? (Note: The C2 architecture includes ESG staff structure and doctrine, ESG organization structure/doctrine, and ESG C2 processes.) Related questions include the following.

- What are the structural and process inhibitors of efficient/effective:
    - Use of assets?
    - Coordination across warfare areas?
    - Coordination with MEU and use of MEU assets?
    - Coordination with externals (e.g., coalition, attached units, reach back, vertical, and horizontal)?
    - Asset allocation process?
- How does switching between contexts impact the effective use of assets?
- What can be done to mitigate inhibitors?
- What will contribute to necessary adaptability of C2 structures/processes?

4.1 Flag Officer/General Officer

A traditional ARG/MEU(SOC) deploys with two, co-equal 06 commanders, the CO of the MEU(SOC) and the commanding officer of the amphibious squadron (CPR), who share command. This relationship is based on the supported/supporting doctrine in Joint Doctrine for Amphibious Operations. For many missions, a higher authority will designate the supported and supporting commanders (Deal, Cornforth, Goetke, and Parcell, 2004); in other cases, CPR and CO MEU will mutually agree upon the supported commander. This is the command model adopted by ESG-2. ESG-1 operated under a flag officer, with a separate staff, and the Commander, ESG-1 functioned as the officer in tactical command (OTC).

One outstanding consideration is the question of whether the ESG should be led by a Flag level or General Officer vice an O-6 level officer. An ESG Flag-led staff provides the Coalition Force Maritime Component Commander a more experienced and senior Staff afloat. A Flag-led staff also bridges the operational and tactical levels and avoids task saturation at the CTG level. The Flag-led ESG is centered on looking ahead to transform littoral warfare doctrine and force structure. Other advantages offered by a Flag-led ESG include: a Flag-led ESG is more effective when coordinating with Flag-led coalition Units; a Flag-led ESG achieves parity with a Carrier Strike Group — a significant advantage once in theater (and for procuring resources during work ups). A Flag-led ESG is essential for conducting Regional Engagements, particularly in the CENTCOM area of operations. (ESG-3 Expeditionary Strike Group 3 Task Force 58 Post-Deployment Brief, 11 January 05).

4.2 Doctrine

The ESG currently uses a mixture of doctrines, combining Composite Warfare Commander[1] (CWC) doctrine and the supported/supporting relationship from Amphibious doctrine.[2] In effect, this entails the Surface Combat Commander (SCC) being required to operate under two different sets of doctrine. The SCC node can become extremely busy and the requirement for the OTC to manage two organizational structures adds to an already high workload. Under CWC doctrine the SCC has authority for the apportionment of assets. Yet when managing the MEU assets, the supported/supporting relationship is the prevailing doctrine and represents a very different way of apportioning assets.

Issues that arise when employing a combined set of doctrine include the question of who is the supported commander and who is the supporting for different situations? CWC doctrine is geared more for open ocean operations, yet those are not the type of missions envisioned for the ESG. A related issue is that CWC doctrine is defensive in nature, developed from the perspective of a "blue water" Navy defending the Fleet. Strike capability was added later where the Navy version of strike was conducted by carrier aircraft. Because Naval strike and amphibious strike involve different aspects, it can be confusing to have a "Strike Commander."

5. The Current ESG-1

The current ESG-1 is scheduled to deploy again sometime in Spring 2005, and will be headed by a Navy Admiral. ESG-1 will consist of the USS Tarawa (LHA) as the primary flag ship, along with the USS Pearl Harbor (LSD) and USS Cleveland (LPD) as the other amphibious ships. The surface combatants will include the USS Chosin (CG), USS Stout or Gonzales (DDG), USS Ingraham (FFG) plus an attached submarine, the Santa Fe (SSN). The 13th MEU(SOC) is the major strike component of ESG-1 and consists of a "standard" Ground Combat Element (GCE) (a 2000-man Marine force comprised of three companies), an Air Combat Element (ACE), and the Combat Service Support Element (CSSE). The ACE, which constitutes the major part of the air power of the ESG, consists of 6 Harriers (AV8B), 12 assault helicopters (CH-46), 4 Cobra helicopters (AH-1W), 3 Huey aircraft (UH-1) plus 4 heavy lift helicopters (CH-53).

At present the Tarawa is undergoing reconfiguration of its key C2 spaces along with other ship upgrades. The officers and staff are going through a series of training events and planned exercises in preparation for their final deployment. The training (and to some extent the ship space reconfiguration) is commensurate with the C2 structure that has been chosen for ESG-1. This C2 structure for ESG-1 is shown in Figure 1.

---

[1] CWC doctrine is geared more for open ocean operations, yet those are not the type of missions envisioned for the ESG. CWC doctrine is more appropriate when ships are operating in close proximity and can provide mutual support.

[2] Post World War II, the Marine Corps rewrote the traditional Amphibious Warfare doctrine and developed the supported/supporting commander concept which specifies which commander will be supported and which will support, the conduct of each mission. This precludes, for example, a Navy Warfare commander from taking operational control of Marine air assets, which would be possible under CWC doctrine.

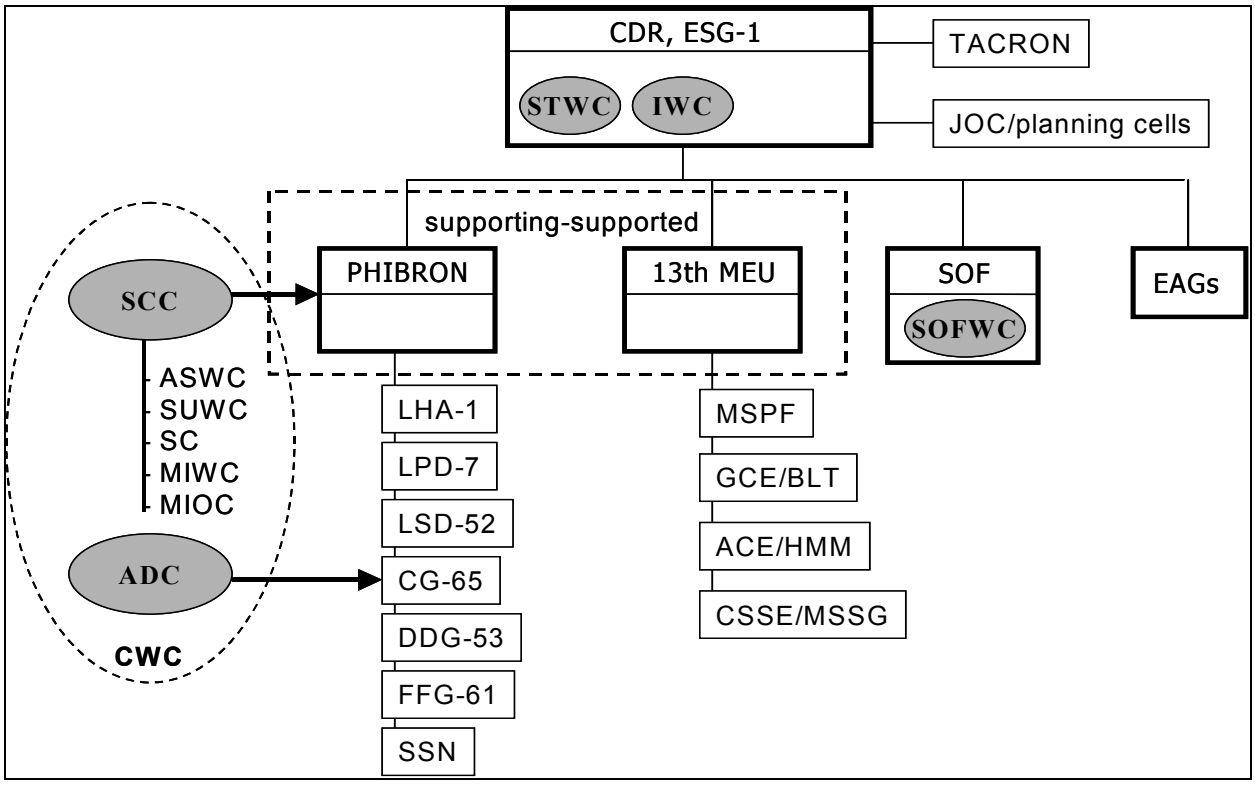

Figure 1. Proposed Command and Control Structure for ESG-1.

The C2 structure for ESG-1 is similar to that used in ESG-3 (although the people that filled the commander roles differ). The five principal warfare commanders include: Sea Combat Commander (SCC), Air Defense Commander (ADC), Strike Warfare Commander (STWC), Information Warfare Commander (IWC), and SOF Warfare Commander (SOFWC). It may be assumed that these commanders fall under a Navy-like CWC doctrine, with the possible exception of the SOFWC.

4.1 The CWC-like relationships in ESG-1

When assigning these principal roles to individual commanders, factors such as expertise, staff size and capability, conflict resolution authority, and so on need be taken into account. Unlike some previous ESGs, the role of Strike Commander may not be allocated to the MEU commander, but is retained by CESG-1. Presumed advantages of this decision include the ability to better coordinate Navy strike with MEU ground strike (providing unity of command), keeping a focal point for resolving the competing demands from other warfare commanders (WCs) for the ACE air assets, and removing/reducing the operational constraints on MEU assets.

Clearly this is a controversial decision as the battalion landing team (BLT) is the major strike force in the ESG, and the primary mission for the ACE is to support the Marines on the ground. However, in previous ESG deployments, upon entering theater and becoming a unit of force under a JTF or a Fleet Commander, the Marines were often detached ashore (sometimes with only a part of their ACE), or part of the ACE (e.g., the AV8Bs) were sent off (i.e., the tactical

control (TACON) was transferred) to a regional commander for assignment elsewhere. It is felt that the flexibility to deal with such external demands on MEU strike assets is best left to the CESG and his N-staff.

The role of IWC is retained by the CESG, or more precisely his N3 (current Operations Officer) or possibly his N2 (Intel officer). The PHIBRON (CPR) has been given the hat of SCC, and the captain of the CG has the role of ADC. Note that the ADC role deals largely with the employment of air defense systems (missiles, guns) and maneuver of the ESG ships. However, when conducting air defense, the ADC will often call upon, or seek available air assets, to conduct visual identification of suspect aircraft in a vital zone. At this time it is not clear whether ESG-1 will have SOF or NSW teams attached when it reaches theater, and consequently no individual has yet been assigned as the SOFWC, although a member of the ESG staff (e.g., the N5) could take on this role.

There are several Functional Warfare area commanders under the SCC. These include Undersea Warfare (USWC), Surface Warfare (ASUWC), Screen (SC), Mine Warfare (MIWC), and Maritime Interdiction Operations Commanders (MIOC). These roles are not necessarily filled by individuals on a standing basis, but are "stood-up" as the situation warrants, for example if workload in a functional area becomes excessive. In ESG-1, individuals are identified as secondary Functional Warfare commanders, with the SCC (and his staff!) being the primary commander(s). Note that it is also possible to designate a secondary SCC, for example by dividing the SCC duties across the battlespace in a geographic manner.

The various Functional Warfare commanders (if and when they are activated) will continue to report to the CPR/PHIBRON as the SCC. They do not become "equals" to the principal warfare commanders who operate under a CWC-like doctrine. The reason for this is to avoid subordinate conflict over the apportionment of scarce Navy air assets. There are *only* four SH-60s, plus possibly one or two attached HH-60s, that must be allocated for ASW, ASUW, MIOC, plus continual surveillance and tracking and ISR.

The missions that will be conducted under the SCC in the present ESG-1 structure are both defensive (ASW, ASUW) and offensive (MIO) in nature. In the previous ESG-3 the defensive activities were assigned to the captain of the CG, who wore the hat of SCC. The CPR retained the offensive role as the MIOC and was also the MIWC. (Given the advances and new systems coming on line for mine operations, there are some who believe that the role of MIWC should be kept separate and unique from SCC.) The fact that the CPR is tasked with such a broad spectrum of duties/missions is requiring that additional personnel and capabilities be added to the CPR staff.

4.2 The Supported-Supporting Relationships in ESG-1

The CPR/PHIBRON and the MEU Commander are the two primary force providers to the ESG. (The SOFWC is a third.) Under amphibious doctrine these two individuals operated in a supporting-supported relationship where the focus was to bring Marines ashore. Thus, the PHIBRON was the Commander of the Amphibious Task Force (CATF) and the MEU-CO was the Commander of the Landing Force (CLF). The PHIBRON had operational control (OPCON)

of the amphibious ships (LHA, LSD, LPD), whereas the MEU-CO had OPCON of the BLT and ACE. In ESG-1, as in previous ESGs, the supporting-supported relationships articulated under amphibious doctrine are retained between CPR and MEU-CO.

It has been stated that in the previous deployment of ESG-1, the N-staff (along with other key personnel) did the planning for various missions, and the force providers did the execution. It is expected that a similar mode of operation will be found in the current ESG-1. If so, each mission being conducted is assigned a *supported* commander, along with one or more *supporting* commanders. The use of assets is planned in advance depending on the time-criticality of the mission. (Air planning is typically conducted with a 48-72 hour lead time in order to provide input to the regional air tasking order (ATO)). An area in which the supporting-supported relationships manifest is the creation of Expeditionary Action Groups (EAGs). In such cases, two or more ships for the ESG are typically dispersed (e.g., to put Marines ashore at some location outside the immediate battlespace area), along with some supporting air assets.

A supported commander will be designated for each EAG. The use of Maritime Special Purpose Forces (MSPF), a small highly capable Marine unit, will also fall under a supporting-supported relationship. Depending on the mission, the designated MSPF commander might be supported (e.g. when tasked to do a heliborne-visit, board, search, and seizure (H-VBSS), or might be supporting to a maritime interdiction operation commander (MIOC) by performing ISR on departing ships from an inserted ground position. Clearly, the designation of a supported commander (and associated supporting commanders) on a mission-by-mission basis suggests a highly flexible C2 organization. Indeed, one might even argue that the C2 organization is "different" depending on the mission. The fact that ESG assets are likely to be dispersed geographically, as an EAG or otherwise, has led people to question whether a CWC-like organization is best for dispersed operations. Typically, CWC requires a close proximity of all WCs for planning, asset apportionment, and task execution.

A final element shown in Figure 1 is the Tactical Air Squadron (TACRON). This unit, which is attached to ESG, conducts the air planning, develops the ATO for ESG air, manages air traffic, etc. The TACRON is a key participant in the ESG planning meetings. In at least one previous ESG, the TACRON assumed the role of STWC (once the MEU had been offloaded). The TACRON generally assumes the central role for all ESG air operations, and is also the AREC and helicopter element coordinator (HEC).

4.3 Other Elements that Affect the C2 Organization

In addition to the primary warfare commanders and the functional commanders, the C2 organization includes approximately eight to ten "coordinators" that make the C2 processes work. These people are the enablers, and their roles and responsibilities are generally established by the armed forces well outside of the ESG. Some examples of these warfare *coordinators* are the Submarine Element (SEC), Helicopter Element (HEC), Force Track (FTC), Launch Area (LAC), etc. In addition to these coordinators, a C2 organization relies heavily on the use of Liaison Officers (LNOs) to effect coordination and provide expertise between C2 nodes. The use of LNOs is particularly useful for planning operations when forces in question are dispersed.

The backbone of any C2 organization is the C2 systems that support information distribution, presentation, command briefs, teleconferencing, communications, and coordination. These are the hardware and software systems, the data collection systems, and display systems. It is beyond the scope of this paper to discuss them here, but we note that as reported from Tactical Training Group, Pacific (TTGP), the relative use and utility of C2 systems listed in increasing order of effectiveness was: Collaboration at Sea (CAS) – Knowledge Web (KWeb) – CENTRIX – Global Command and Control System-Maritime (GCCS-M) – Advanced Combat Display System (ACDS) – email – chat – voice. It is well known that email, chat and voice predominate in Joint operations, however due to the secure nature of these media, CENTRIX is the C2 system that is used for coordination with coalition forces.

The battle rhythm of an ESG describes the daily activity cycle of commanders and staff, and is depicted in Figure 2. It encompasses future operations, current operations, the development of commander's intent, and "effects" within an EBO. While the battle rhythm is not a part of the C2 organization per se, it has relevance to the C2 processes. The planning and monitoring processes (including meetings and preparations), along with the promulgation of effects, place concurrent demands on the key warfare commanders and their staff. For example, an ESG may be planning two missions while they are executing three! Moreover, the internal planning within the ESG must synchronize with external processes ongoing in theater such as a regional ATO (via JFACC), or the planning being done by a Naval Fleet or Carrier Strike Group (CSG).

4.4 Some Comments on the Proposed C2 Organization for ESG-1

As mentioned earlier, the C2 roles established in ESG-1 are similar in large part to those of earlier ESGs. In particular, earlier ESGs employed a mix of CWC and amphibious doctrine. The careful articulation of supported-supporting relationships was a key contributor to the success of past deployments. What differed most among the ESGs were the "hats" worn by the CPR/PHIBRON.

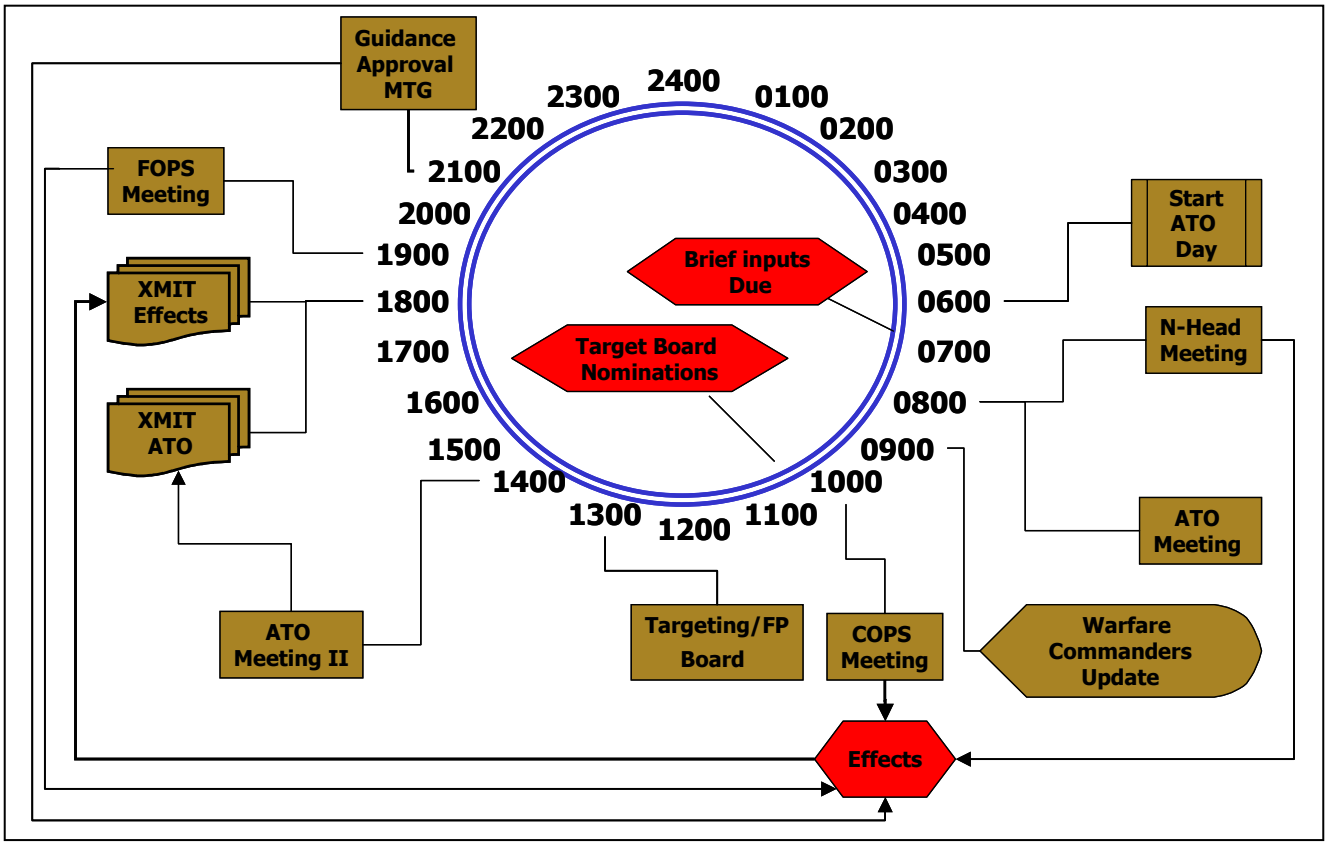

Figure 2. Typical Battle Rhythm of an ESG.

As noted earlier, the ESG has two major force providers (CPR and MEU), and three staffs of various sizes and expertise (C-ESG, CPR, and MEU) to conduct a myriad of missions. There is clearly overlap in staff expertise (e.g. air, especially when one adds the TACRON). And there are gaps in staff expertise (e.g., MIO/VBSS) due in large part to new mission requirements arising from GWOT.

Clearly, the CPR/PHIBRON is a major node in the C2 structure of ESG-1. Not only is this person a force provider (having OPCON or TACON over the amphibious ships, the surface combatants and the SSN), but he is also a key player (SCC) within a CWC-like structure, and is fulfilling his "usual" role as the Commander, Amphibious Task Force (CATF) for Marine operations ashore and operating therein in a supported-supporting relationship. [It is noted that in ESG-3 the title of Amphibious Warfare Commander (AWC) was given to the Navy's role of supporting the MEU.] Even the SCC role is a mix of defensive and offensive duties. ESG-1, in recognizing the potential overload to the CPR, is attempting to increase the CPR staff and has designated alternate (functional) warfare commanders that could be activated as needed. In addition, in recognition of the central role of the CPR, the workspace in the JOC on board the Tarawa is being enlarged to accommodate the CPR and additional staff.

The multiple hats being worn by the CPR has led other ESGs to consider a "decomposition" of the CPR via allocation of some roles to other individuals (e.g., tasking the CG-CO as the SCC).

Whether the CPR (and staff) are overloaded or pulled in different directions as a consequence of operating under two different doctrines, and whether the activation of subordinate commanders upon demand will prove effective in times of stress remain to be tested. Nevertheless, the role of the CPR in future ESG C2 organizations will be one of much discussion. To quote from ADM Conway (CESG-1): "I don't think a PHIBRON is applicable anymore. We need to combine PHIBRONs and Destroyer Squadrons (DESRONs) and take their planning and operating strengths, and use the seniority to be able to work with other warfare commanders."

The limited air assets of the ESG, which consists primarily of the ACE augmented by a few Navy helicopters and possibly some attached forces, is expected to be under high demand from several warfare areas. To help alleviate requests for a *specific* air asset, the training regimen for ESG-1 is stressing "adaptation" and creative use of assets. Warfare commanders are advised to ask for "capabilities," vice asking for specific aircraft support, when making their requests for assets to accomplish their assigned missions. Also, "seeking different variations on how to get things done" is a recurrent theme heard in the Tactical Training Group, Pacific training courses. Decisions regarding the allocation (and "re-rolling") of air assets are made by the CESG and his staff. But knowing when to "reach out" beyond ESG to ask higher authority for additional assets is also being stressed in the training.

5. The Road Ahead – Evaluating ESG's Command and Control Organization

The first activity being undertaken in support of ESG-1 is an evaluation of their currently proposed C2 organization. As a corollary to this activity, we will be able to identify obstacles and problems that reduce effectiveness. A second activity will involve suggestions and recommendations for adjustments to the C2 organizations as well as alternative C2 organizations. A third, future, activity will involve the design of optimal or congruent organizations, i.e., organizations that are best matched to the task and mission requirements.

5.1 Potential Measures of Effectiveness

The A2C2/NPS team is approaching the evaluation of the C2 organization for ESG-1 using a combination of attending training meetings to learn concerns, modeling in concert with activities at the University of Connecticut, comparisons with findings from other ESG post-deployment reports, as well as applying our collective wisdom and experience. Thus far, we have had representation by A2C2/NPS at ESG Commanders Introduction Conference, at the CWC Conference, and at the ESG Group Commanders Training. In addition, we were participants in a series of organized meetings with key (past and present) ESG staff where focused question and answer sessions added to our knowledge base. We plan to send observers to subsequent ESG exercises and training events as they are scheduled. Beyond working with ESG-1 directly, we have obtained access to various briefs and CNA reports summarizing past ESG deployments; several current NPS students have served on past ESGs.

The modeling approach being utilized attempts to expand previous A2C2 methodologies as applied successfully in Bridge-to-Global (1999) and in SSG-21 to evaluate alternative C2 organizations. Thus far, we are developing the task lists and requirements starting with the Mission Essential Task List (METL) for the ESG. The assets available to the (nominal) ESG are

known, along with possible augmentation of additional (Coalition, Navy, Coast Guard) ships once in theater. By combining tasks drawn from the METL into a scenario (with help already provided by ESG-N3 personnel) the plan is to examine workload distribution and coordination demands across the C2 organizational nodes.

As this work began, it soon became apparent that the key roles of staff and planning activities needed to be included in the models. This is being accomplished by including human "assets" in the modeling framework with associated levels of knowledge, skills and abilities for planning, supporting and/or conducting operations. The modeling context is strong on issues of resource allocation, but needs expansion with respect to information gathering and information processing as prerequisites to task prosecution. In this regard, the models are now being extended to handle intelligence operations, persistent ISR, surveillance and tracking, etc. Some of the metrics that are expected to be forthcoming from these models include: Workload Assessment, Communication Bottlenecks, Resource Shortages, and "Speed of Command."

Among the issues facing an ESG is how it might "plug and play" with (larger) existing forces in theater. Two organizational settings have been proposed as an "end state" for an ESG:

1. As part of a Joint Force, working directly for the Joint Force Commander (e.g., operating as theater reserve; or operating as small JTF). This could be anywhere on a continuum from acting as a small JTF with its own AOR to being in a more complex context that requires significantly more coordination with JFACC, JFLCC, JFMCC.
2. As part of a larger Naval Force requiring coordination with its N-staff/CWC structure. For example, ESG air agencies and processes (e.g., TACRON, ACE) need to be able to work smoothly with JFACC and joint boards, centers and cells in case (1) above. In case (2), the same ESG air agencies and processes need to be able to work smoothly with naval CAG/AP/AW.

In either of these settings it is assumed that the mix of tasks/missions assigned to the ESG would remain consistent. But what is affected is the ESG's C2 organization and processes to enable smooth interaction with (1) or (2). We plan to continue our examination of ESG's C2 organization as regards its fit with external organizations. At issue is also the extensibility of the ESG, either as a mini-JTF with expansion capabilities (a JTF enabler), or as a (Naval) force kernel onto which is added assets in theater, especially coalition forces.

A good deal of consideration has been given to the selection of metrics with which to provide a qualitative evaluation of the C2 system (performance and processes). Metrics take on a lot more relevance when two or more alternative C2 organizational structures are compared. It is often more enlightening to understand the *relative* advantages and disadvantages between two candidates (as expressed via comparison of metrics) than to attempt to interpret a set of numbers for a single structure on an *absolute* scale. One metric that may be enlightening, with our acknowledgement to CAPT Randy Morgan, is the number of Operational Orders and FRAG orders given per day. These are obtainable via the order log for Command and Control. In previous ESGs it was observed that the number of orders/day exceeded by about an order of magnitude the number of orders typical in a CSG or in an ARG/MEU. Understanding the reasons for this, and the factors that contributed to these increases will shed light on the C2

processes in the ESG. For example, are the factors the wider spectrum of missions faced by the ESG, or the fact that a CSG or an ARG/MEU have more limited scope and operate under an established C2 doctrine, or the fact that the ESG's limited assets require a broader set of orders to reduce conflicts, or is it a reflection of a C2 organization that is not yet well-matched to the mission(s) it faces? The goal for this A2C2 research is to produce insights to help answer to these and other questions.

References

Deal, K., Geis, M., and Goetke, J. (2003). *Expeditionary Strike Group (ESG) Proof of Concept Deployment Assessment Plan. Center for Naval Analysis Report*, CRM D0008267.A2/Final, May 2003, Alexandria, VA.

Deal, K., Cornforth, C. M., Goetke, J., & Parcell, A. (2004). ESG Pilot Deployment Assessment Part 1 (U). Center for Naval Analysis Report, CRM D0010256.A1/SR1, Alexandria, VA, May 2004. (SECRET)

ESG-3 Expeditionary Strike Group 3 Task Force 58 Post-Deployment Brief, 11 January 05.

Expeditionary Warfare Training Group, (2005). Expeditionary Warfare Staff Planning Briefing, Expeditionary Strike Groups OPS 034.

ESG OPS. (2005). Expeditionary Warfare Staff Planning Brief presented at CWC Commander's Conference, Tactical Training Group Pacific, San Diego, CA.

Hess, K. P., Entin, E. E., Hess, S. M., Hutchins, S. G., Kemple, W. G., Kleinman, D. L., Hocevar, S. P., & Serfaty, D. L. (2000). Building Adaptive Organizations: A Bridge from Basic Research to Operational Exercises. In *Proceedings of the 2000 Command and Control Research & Technology Symposium*. Naval Postgraduate School, Monterey, CA, June 26-28 2000.

Hutchins, S. G., Kemple, W. G., Entin, E. E., & Serfaty, D. (1998). Innovative Measures for the Evaluation of Command and Control Architectures. In Proceedings of the 1999 Command and Control Research & Technology Symposium, Naval Postgraduate School, Monterey, CA, pp. 120-131. June 29-July 1 1998.

Levchuk, Y.N., Kleinman, D.L., Pattipati, K.R., Kemple, W.G., and Luoma, M. (2000). Assessment of a Model-based Organizational Design Methodology in Bridge to Global '99, In *Proceedings of the 2000 Command and Control Research & Technology Symposium*. Naval Postgraduate School, Monterey, CA, June 26-28, 2000.

Office of the Secretary of Defense, (2002). *Defense Planning Guide*, 2004-2007, 3 May 2002.

Serfaty, D., MacMillan, J., Baker, K. M., Entin, E. E., Wetteland, C., Miller, J., Bowden, T., Laughery, R. Pattipati, K. R., Levchuk, G. M., Kemple, W., Carley, K.M., & Handley, H. A. H. (2002). *On the Performance of FORCEnet Command and Control Structure in Support of Strategic Studies Group XXI: Modeling and Simulation Analysis*. Prepared for Strategic Studies Group XXI, Naval War College, Newport, RI, June 17, 2002.

U.S. Fleet Forces Command, (2002). TACMEMO 3-02.1-02. Expeditionary Strike Group (ESG) Operations, 12 November 2002. (CONFIDENTIAL)